SECRET
CONFIDENTIAL
UNCLASSIFIED

C 206830
1 Sep 59
64

# PROJECT HORIZON

CLASSIFICATION CHANGED
TO UNCLASSIFIED
By authority of Redstone Arsenal
Date May 1972

## Volume II
## TECHNICAL CONSIDERATIONS & PLANS

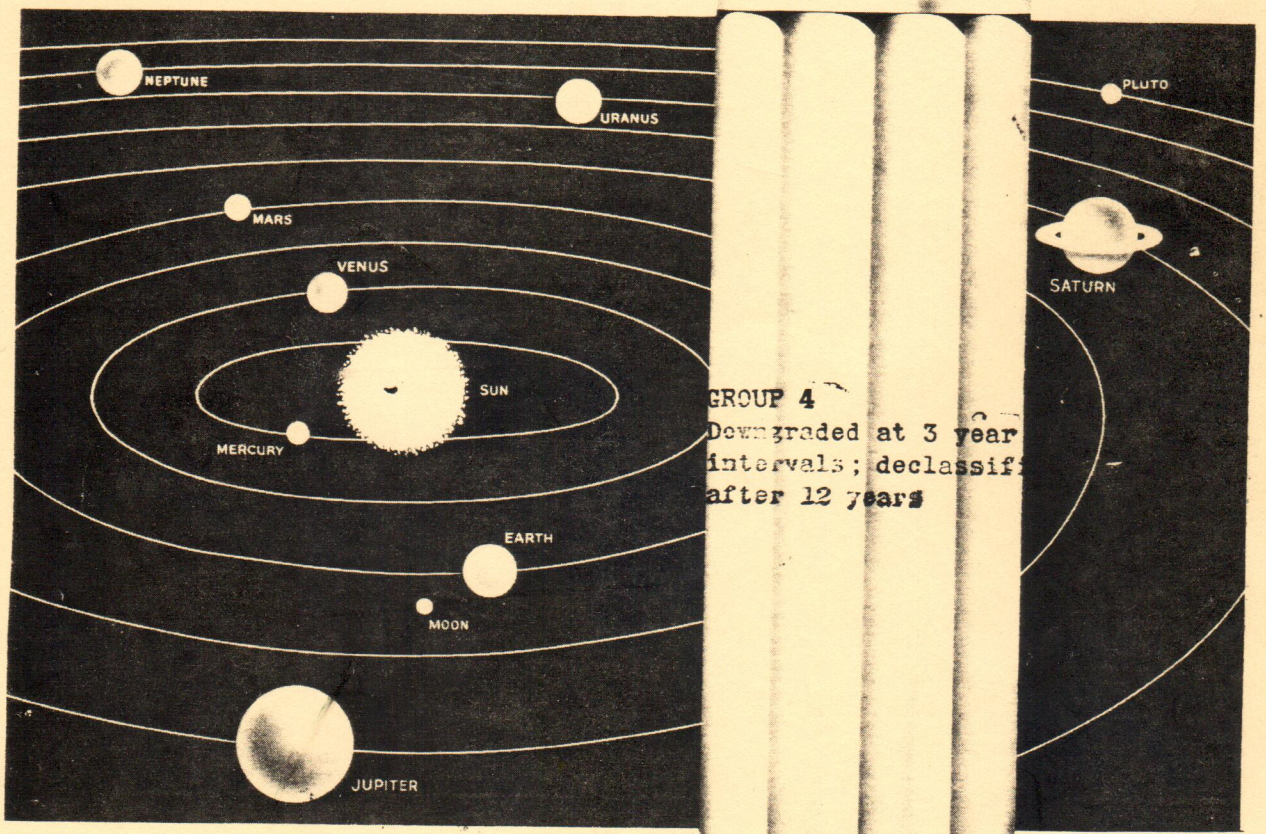


GROUP 4
Downgraded at 3 year intervals; declassified after 12 years

## UNITED STATES ARMY

CONFIDENTIAL
UNCLASSIFIED
SECRET

CONFIDENTIAL
UNCLASSIFIED

VOLUME II

# TECHNICAL CONSIDERATIONS AND PLANS (U)

9 JUNE 1959

PROJECT HORIZON REPORT

A U. S. ARMY STUDY FOR THE ESTABLISHMENT
OF
A LUNAR OUTPOST

Regraded Confidential 9 June 1962

UNCLASSIFIED
CONFIDENTIAL

## SECURITY NOTE

This document contains information affecting the national defense of the United States within the meaning of the Espionage Law, Title 18, U. S. C., Section 793 and 794. The transmission or the revelation of its contents in any manner to an unauthorized person is prohibited by law.

CONFIDENTIAL
SECRET
UNCLASSIFIED

VOLUME II
TABLE OF CONTENTS


| | | Page |
|---|---|---|
| CHAPTER I: | INTRODUCTION | 1 |
| | A. Background | 1 |
| | B. Objectives | 1 |
| | C. Scope | |
| | D. Assumptions | 2 |
| | E. Summary | 4 |
| | F. Conclusions | 6 |
| | G. Acknowledgements | 6 |
| CHAPTER II: | OUTPOST | 9 |
| | A. Location | 10 |
| | B. Design Criteria | 15 |
| | C. Construction Procedure and Schedule | 43 |
| | D. Medical Requirements | 43 |
| | E. Personal Equipment | 46 |
| | F. Life Essentials Supplies | 49 |
| | G. Surface Transportation | 57 |
| | H. Environmental Research and Support Activities | 53 |
| CHAPTER III: | SPACE TRANSPORTATION SYSTEM | 61 |
| | A. Flight Mechanics | 61 |
| | B. Orbital Carrier and Space Vehicles | 81 |
| | C. Transportation System Integration | 146 |
| CHAPTER IV: | COMMUNICATIONS ELECTRONICS | 175 |
| | A. Introduction | 175 |
| | B. Communications Requirements | 180 |
| | C. Surveillance Requirements | 201 |




UNCLASSIFIED
SECRET
CONFIDENTIAL

| | | |
|---|---|---|
| CHAPTER V: | LAUNCH SITE | 207 |
| | A. Requirement | 207 |
| | B. General Criteria for Launch Site Selection | 208 |
| | C. Launch Site Operations | 209 |
| | D. Launch Facilities | 214 |
| | E. Possible Equatorial Launch Sites | 219 |
| | F. Christmas Island Versus Brazil | 229 |
| CHAPTER VI: | PROGRAM LOGISTICS | 233 |
| | A. Introduction | 233 |
| | B. Manufacturing Considerations | 233 |
| | C. Transportation Considerations | 236 |
| | D. Movement Control | 240 |
| | E. Personnel and Administration | 240 |
| | F. Operations and Training | 248 |
| CHAPTER VII: | RESEARCH AND DEVELOPMENT | 261 |
| | A. Project Phases | 261 |
| | B. Basic and Supporting Research | 263 |
| | C. Program Requirements, R&D | 275 |
| | D. R&D, Supporting Research, Project HORIZON | 277 |
| | E. Supporting Role of Other U. S. Programs | 278 |
| CHAPTER VIII: | PROGRAM COST AND SCHEDULE | 281 |
| | A. Outpost Cost | 281 |
| | B. Orbital Station | 281 |
| | C. Vehicles | 282 |
| | D. Payload Containers | 284 |
| | E. Launch Site and Operation | 286 |
| | F. Communications and Electronics System | 286 |
| | G. Personnel Training | 288 |
| | H. Research and Development | 289 |
| | I. Program Management | 289 |
| | J. Summary | 291 |
| BIBLIOGRAPHY | | 297 |

CONFIDENTIAL
UNCLASSIFIED

VOLUME II
LIST OF TABLES AND FIGURES


| Table | | Page |
|---|---|---|
| II-1 | Astronomical and Astrophysical Quantities For the Moon | 16 |
| II-2 | Environmental Requirements for Man | 20 |
| II-3 | Human Engineering Considerations | 22 |
| II-4 | Flight Time and Velocity Values for Various Earth-Moon Trajectories | 63 |
| II-5 | Trajectory Data for 96-Minute Orbit (SATURN II - 3 stage) | 65 |
| II-6 | Trajectory Data for Escape Mission | 68 |
| II-7 | Trajectory Data for Escape from 96-Minute Orbit | 70 |
| II-8 | Guidance Accuracy Requirements (3 values) | 80 |
| II-9 | Weight Summary - SATURN I | 83 |
| II-10 | Weight Summary - SATURN II | 93 |
| II-11 | Weight Summary of Lunar Landing Vehicle | 106 |
| II-12 | Weight Summary of Orbit-Launched Lunar Vehicle | 109 |
| II-13 | Weight Summary of the Lunar-Earth Return Vehicles | 112 |
| II-14 | Main Features of Guidance and Control Systems | 120 |
| II-15 | Weight Summary of Typical 12,000,000-lb Thrust Space Carrier Vehicle | 138 |
| II-16 | Data Summary of SATURN II with Nuclear Upper Stage | 142 |




UNCLASSIFIED
CONFIDENTIAL

| Table | | Page |
|---|---|---|
| II-17 | Data Summary of SATURN II with Nuclear Second Stage | 143 |
| II-18 | Data Summary of F-1 Cluster with Nuclear Upper Stages | 144 |
| II-19 | Summary of Vehicle Capability and Limitations | 165 |
| II-20 | Summary of Weights of Material Transported to the Lunar Surface (1965-1967) | 171 |
| II-21 | Summary of Weights Available on the Lunar Surface (80% Rel, 1965 through 1967) | 172 |
| II-22 | Areas of Interest in Communications and Electronics | 176 |
| II-23 | Typical System Characteristics | 193 |
| II-24 | Typical System Characteristics - Lunarcom Link | 196 |
| II-25 | Typical Systems Characteristics - Luna Man Packed Radio | 199 |
| II-26 | Typical Systems Characteristics - Lunar Net | 199 |
| II-27 | Typical Systems Characteristics - Emergency Link | 204 |
| II-28 | Vehicle and Payload Production Requirements | 235 |
| II-29 | Orbital Crew Primary Skill Requirements | 243 |
| II-30 | Research and Development Schedule and Estimate of Funding Requirements | 276 |
| II-31 | Orbital Station Cost | 282 |
| II-32 | Vehicle Cost | 283 |
| II-33 | Payload Container Cost | 285 |

CONFIDENTIAL
CONFIDENTIAL
UNCLASSIFIED


| Table | | Page |
|---|---|---|
| II-34 | Launch Site Costs | 287 |
| II-35 | Launch Site Cost | 288 |
| II-36 | Typical Communications System Cost Breakdown | 288 |
| II-37 | Typical Personnel Training Cost | 289 |
| II-38 | Research and Development Cost Breakdown | 290 |
| II-39 | Program Management Cost | 291 |
| II-40 | Cost Summary | 293 |
| II-41 | Summary of HORIZON Accomplishments | 294 |

| Figure | | |
|---|---|---|
| II-1 | Map of Moon with Areas of Interest for Landing Site ($\pm$ 20° latitude and longitude) | 12 |
| II-2 | Enlargement of Lunar Area of Interest with Most Promising Outpost Locations | 13 |
| II-3 | Layout of Initial Construction Camp | 24 |
| II-4 | Cross-section of Typical Outpost Compartments | 25 |
| II-5 | Overall View of Initial Construction Camp | 26 |
| II-6 | Typical Lunar Construction Vehicle | 29 |
| II-7 | Layout of Basic 12-Man Outpost | 35 |
| II-8 | Overall View of 12-Man Outpost | 36 |
| II-9 | Nuclear Power Plant on Moon (60 kw) | 40 |
| II-10 | Schedule for Initial Construction Camp | 41 |
| II-11 | Schedule for Basic 12-Man Outpost | 42 |




UNCLASSIFIED
CONFIDENTIAL
SECRET

| Figure | | Page |
|---|---|---|
| II-12 | Typical Lunar Suit (2 pictures) | 47 |
| II-13 | Typical Lunar Surface Transport Vehicle | 54 |
| II-14 | Typical Earth-Moon Parabolic Trajectory | 64 |
| II-15 | Ascent Trajectory for Transfer into 96-Minute Orbit | 67 |
| II-16 | Powered Trajectory for Escape from the Earth | 69 |
| II-17 | Escape from 96-Minute Orbit | 71 |
| II-18 | Lunar Landing Velocity Vectors | 72 |
| II-19 | Moon-to-Earth Velocity Vectors | 73 |
| II-20 | Lunar-Earth Flight Time vs Launch Velocity | 75 |
| II-21 | Deceleration vs Angle of Re-entry for Earth Atmosphere | 76 |
| II-22 | Altitude and Acceleration vs Time Data for Earth Atmospheric Re-entry (11,000 m/sec velocity) | 78 |
| II-23 | SATURN I | 82 |
| II-24 | SATURN I - Booster | 85 |
| II-25 | SATURN I - 2nd Stage | 87 |
| II-26 | SATURN I - 3rd Stage | 89 |
| II-27 | SATURN II | 91 |
| II-28 | SATURN II - Booster | 95 |
| II-29 | SATURN II - 2nd Stage | 99 |
| II-30 | SATURN II - 3rd Stage | 101 |
| II-31 | SATURN II - 4th Stage | 103 |

SECRET
CONFIDENTIAL
UNCLASSIFIED


| Figure | | Page |
|---|---|---|
| II-32 | Lunar Landing Vehicle | 105 |
| II-33 | Orbit-Launched Lunar Vehicle | 107 |
| II-34 | Lunar Landing Vehicle | 108 |
| II-35 | Typical Orbital Re-entry Vehicle | 111 |
| II-36 | SATURN I Carrying Orbital Return Vehicle as a Payload | 113 |
| II-37 | Lunar-Launched Return Vehicle | 115 |
| II-38 | SATURN II Direct Lunar Landing Vehicle (Manned Capsule) | 116 |
| II-39 | Lunar-Assembled Earth Return Vehicle | 118 |
| II-40 | Block Diagram of a Typical Guidance and Control System | 122 |
| II-41 | Dimensions of Typical Tanker Payload (SATURN I) | 128 |
| II-42 | Lunar Landing Vehicle with 6,000-lb Propulsion Unit as a Payload | 129 |
| II-43 | Typical Space Platform Assembled from Empty Containers | 133 |
| II-44 | Refueling of Orbit-Launched Space Vehicle | 134 |
| II-45 | Dimensions of Space Carrier Vehicle Based on 8 x 1.5 Mil Cluster | 137 |
| II-46 | SATURN II with Nuclear 3rd Stage | 139 |
| II-47 | SATURN II with Nuclear 2nd Stage | 140 |
| II-48 | F - 1 Cluster Vehicle with Nuclear Upper Stage | 141 |




UNCLASSIFIED
CONFIDENTIAL
SECRET

| Figure | | Page |
|---|---|---|
| II-49 | Carrier Vehicles - Comparison of Dimension | 150 |
| II-50 | Typical Carrier Vehicle Development Firing Schedule | 153 |
| II-51 | Typical Space Vehicle Development Program (for manned applications) | 156 |
| II-52 | Project HORIZON Personnel Space Transportation Requirements | 160 |
| II-53 | Earth-Lunar Transportation Requirements | 163 |
| II-54 | Earth-Orbit Cargo Transportation Requirements | 164 |
| II-55 | Project HORIZON Vehicle Requirements and Launching Schedule | 167 |
| II-56 | Supply Schedule for Direct Earth to Outpost Cargo Flights | 171 |
| II-57 | Earth Complex and Lunarcom Links | 177 |
| II-58 | Communication Need Lines 1962 | 181 |
| II-59 | Communication Need Lines 1964 | 182 |
| II-60 | Typical Tracking and Lunarcom Site | 184 |
| II-61 | Earth-Based Communication Complex | 186 |
| II-62 | Outpost to Earth Path Carrier-to-Noise Power Ratio-Carrier Frequence | 192 |
| II-63 | Lunar Communication Net | 197 |
| II-64 | Micro-Module Communication Receiver | 198 |
| II-65 | Radiated Power Required for Lunar-Earth TV | 202 |
| II-66 | Schematic Flow Diagram of Launch Site | 211 |

SECRET
CONFIDENTIAL
UNCLASSIFIED


| Figure | | Page |
|---|---|---|
| II-67 | SATURN Booster Recovery | 212 |
| II-68 | SATURN Booster Floatation into Well of LSD | 213 |
| II-69 | Equatorial Launch Complex | 215 |
| II-70 | World Wide Site Choices for an Equatorial Launch Facility | 220 |
| II-71 | Christmas Island | 223 |
| II-72 | Potential Site in Brazil for Equatorial Launch Base | 227 |
| II-73 | Schedule for Construction and Development for Equatorial Launch Base | 230 |
| II-74 | Outpost Phases | 246 |
| II-75 | Preliminary Personnel Schedule | 247 |
| II-76 | Preliminary Orbital Training Requirements | 252 |
| II-77 | Preliminary Outpost Training Requirements | 253 |
| II-78 | Training Cycle | 255 |
| II-79 | Organization for R&D (Project HORIZON) | 262 |
| II-80 | Lunar Environment Research, Development and Training Center (LERDT) | 272 |
| II-81 | Cross Section Through Main Facility at LERDT | 273 |
| II-82 | View of Flight Simulator and Medical Research Center | 274 |
| II-83 | Outstanding Accomplishments Versus Time | 295 |


UNCLASSIFIED
CONFIDENTIAL
SECRET

CONFIDENTIAL
SECRET
UNCLASSIFIED

# (S) CHAPTER I: INTRODUCTION

## A. BACKGROUND

This volume is the second of two volumes of a preliminary feasibility study for the establishment of a lunar outpost by 1966. It deals with the technical requirements and indicates the way and means for the actual accomplishment of this mission.

This study is an outgrowth of a systems study for the SATURN family of space carrier vehicles initiated late in 1958, in which the earth-lunar transportation mission was picked as a typical and major job to be accomplished by the SATURN vehicle. This mission was used for optimization of the transportation system without neglecting other requirements for SATURN vehicles which also have been established, such as the 24-hour communication satellite. Other missions which are expected to be accomplished by the SATURN vehicle have been considered, such as orbital return vehicles, advanced propulsion system testing and planetary probes. All of these missions, however, are not discussed in this report.

The responsibility for coordination and editing of this volume was assigned to the Development Operations Division of the Army Ballistic Missile Agency (ABMA), by letter from Headquarters, Army Ordnance Missile Command (AOMC), dated 3 April 1959. This assignment in turn was delegated to the Future Projects Design Branch of the Structures and Mechanics Laboratory by the Director of the Development Operations Division. Other laboratories within the Development Operations Division contributed to this study in appropriate areas of interest and capability. All seven technical services participated in this study, with major inputs from the Ordnance Corps, Signal Corps, and Corps of Engineers. This report is the product of a study conducted by a unique technical task force of the Department of the Army.

## B. OBJECTIVES

The objective of this volume is to present applicable technical information available at this time, which supports the statement that the "establishment of a lunar outpost by 1966 is within the capabilities of the United States."

UNCLASSIFIED
SECRET
CONFIDENTIAL

## C. SCOPE

The scope of this study covers the design criteria and requirements of a lunar outpost, its construction and maintenance, and a summary of its operational aspects.

The volume further discusses the earth-lunar transportation system from the vehicle design, transportation system integration, and economical point of view.

The scope of this report also includes the earth support operations, including earth-launching and servicing facilities, as well as the complete earth-lunar communication system.

Considerable effort has been made to integrate all individual requirements and activities into one complete operation to accomplish the mission of establishing and supporting a lunar outpost. This includes an estimate of the schedule and funding requirements for the complete program.

It is not within the scope of this preliminary feasibility study to furnish a detailed development and operational plan for the actual accomplishment of the task. This is considered to be the next logical step and would require approximately eight months to accomplish.

## D. ASSUMPTIONS

The following basic assumptions have been made for the purpose of this study in the individual areas indicated:

1. Lunar Operations

a. The objective is limited to the establishment and support of a 12-man outpost, although exploitation possibilities are discussed.

b. The lunar environment will be suitable for manned operations on the surface if the personnel are properly protected and equipped.

c. The preliminary exploration of the lunar environment will be carried out by the National Aeronautics and Space Agency and/or Advanced Research Projects Agency as part of the national space program.

SECRET CONFIDENTIAL
UNCLASSIFIED

d. Existing natural resources on the moon, which might be used during the time period of interest, are not taken into consideration. (Tonnage which might be utilized during this period is considered negligible in comparison to total requirements.)

e. No cave suitable for living or working quarters will be accessible during the time period of interest.

f. A closed cycle life support system is not considered to be available during the time period 1964-1967, which is a conservative assumption since at least a partial system is considered feasible.

g. Preferably, the stay time of an individual on the moon should be one year or less.

2. Transportation System

a. All orbital operations will be carried out in a 96-minute (307 nautical miles) equatorial orbit of the earth.

b. An equatorial launch site will be developed and funded as part of this program.

c. An elaborate orbital space platform in a 96-minute equatorial orbit would be of great utility, but is not mandatory for conduct of this program.

d. Orbital operations are based on orbital fueling rather than on orbital assembly procedures.

e. A 24-hour communication satellite system will be in operation by 1964.

f. A satisfactory ground world network of tracking and communication facilities will be in operation during the time period of interest (1964-1967).

3. Carrier Vehicles

a. The basic carrier vehicle for this program (SATURN II) with optimized upper stages and high energy propellants can soft-land 6000 pounds of cargo on the moon in one direct trip or can carry 70,000 pounds of cargo into the 96-minute (307 nautical miles) equatorial orbit.

UNCLASSIFIED
CONFIDENTIAL SECRET

b. The development of the high energy, high thrust engines, used for the SATURN II upper stages, will be sponsored by NASA and/or ARPA in separate programs. Their development will not be funded in this program.

c. The theoretical growth potential in the form of 50K nuclear propulsion system for the third stage of SATURN II has not been considered for the time period of interest. This is a conservative assumption since such an engine could be developed by 1966-1967.

d. $O_2/H_2$ engines will be used for the landing maneuver on the moon. Storable propellants with 300 seconds specific impulse will be used for the takeoff maneuver on the moon.

e. Present day materials have been considered throughout this study with some modest improvements in the state-of-the-art consistent with the time period of interest.

## E. SUMMARY

This volume describes the technical problems and requirements as envisioned today for the establishment of a 12-man lunar outpost and its first year of operation.

A lunar environment exploration program, on a scale considerably larger than is known to be currently planned, must begin by 1962. It is anticipated that the NASA will sponsor this research activity. During the period 1960 through 1964, the development of the basic carrier vehicles by October 1963 and December 1964, respectively. By the end of 1964 a total of 72 SATURN vehicles should have been launched, of which 40 are expected to contribute to the accomplishment of Project HORIZON. These 40 launchings will include six lunar satellites, eight lunar soft landings, seven lunar circumnavigations, four orbital return missions, and 15 operational trips for the buildup phase. The purpose of the initial 25 firings will be the development of the transportation system's techniques and procedures, as well as that of obtaining scientific and engineering environmental information. The buildup phase begins with the first orbital flight in August 1964 and the first operational cargo delivery to the moon in January 1965. Cargo will be sent to the lunar construction site directly from the earth's surface in packages of 6000 pounds each, and via orbit in packages of 48,000 pounds each. The first manned landing is scheduled for April 1965 and will consist of a two-man vehicle with an immediate earth

SECRET
CONFIDENTIAL
UNCLASSIFIED

return capability. The buildup and construction phase will be continued without interruption until the outpost is ready for beneficial occupancy and manned by a task force of 12 men by November 1966.

This buildup program requires 61 SATURN I and 88 SATURN II launchings in a period of 28 months (August 1964 through November 1966). This requires an average launching rate of 5. 3 per month. The total useful cargo transported to the moon amounts to 245 tons, assuming an average mission reliability of 80 percent.

This transportation job results in landing material for the construction of a lunar outpost with a basic structure weight of 40 tons, and an additional 205 tons for equipment and supplies. Approximately 40 of these 205 tons will be required for life essential supplies.

A total of 64 firings have been scheduled for the first operational year of the lunar outpost, December 1966 through 1967, and results in a useful cargo transportation capability of approximately 133 additional tons from earth to the lunar surface. These vehicles also provide transportation of orbit and lunar crews to the orbit as well as rotation of the outpost personnel, with a nominal stay time of nine months on the moon. An additional six SATURN I and ten SATURN II vehicles are assigned the mission of emergency vehicles during the entire project. With the same assumed reliability, the emergency vehicles have the capability of transporting an additional 30 tons of cargo to the lunar surface.

The average transportation cost for a one-way trip to the moon for the program presented herein is $4250 per pound. This includes the investment in the R&D program and the necessary facilities. To sustain the operation after 1968 without post expansion and based on the same carrier vehicles, this figure would be reduced to approximately $1850 per pound. By use of nuclear or electric propulsion, a further reduction of this cost figure to $400 per pound seems feasible by 1975. Early in the program, the transportation cost for a round trip from the earth to the moon and return to earth would be approximately 48 times that of a one-way trip from earth to moon. This may be reduced to a factor of 25 by further development.

The total program cost as outlined in this report was estimated to be $6,052,300,000 over an eight and a half year period. This is an average of approximately $700 million per year. These figures are estimates based on past experience and, while preliminary, they

UNCLASSIFIED
CONFIDENTIAL
SECRET

represent the right order of magnitude. Though substantial, they should be compared with the annual sales volume of the aircraft and missile industry of ten billion dollars per year, or the annual defense budget of forty-two billion dollars per year.

Many possibilities are recognized already, as to how the system involved can be further optimized and the overall program cost and effort further reduced. The full exploitation of these possibilities has yet to be realized, and requires additional study beyond this preliminary investigation.

## F. CONCLUSIONS

1. The establishment of a lunar outpost is considered to be technically and economically feasible.

2. The payload capabilities of the SATURN family, as well as their timely availability, makes it feasible to land the first two people on the lunar surface by Spring of 1965 and have a 12-man permanent outpost operational by November 1966.

3. This program requires only modest improvements of the state-of-the-art and no major breakthroughs.

4. The probability of success and the chance of survival of the personnel involved justify immediate initiation of this program.

5. It is considered to be advisable to employ a more efficient carrier vehicle (partly nuclear propelled) in 1970, or thereafter, any extension of the lunar program presented herein.

## G. ACKNOWLEDGEMENTS

This volume is the product of an integrated study conducted by a task force of the Technical Services of the Department of the Army. It was coordinated and directed by H. H. KOELLE, Chief, Future Projects Design Branch of the Development Operations Division, ABMA, assisted by F. L. WILLIAMS and other Branch personnel.

The individual portions of this report were coordinated and compiled by six technical working groups headed by the individuals indicated below:

SECRET
CONFIDENTIAL
UNCLASSIFIED

I. OUTPOST, Chairman: H. N. LOWE, Corps of Engineers
II. FLIGHT MECHANICS, Chairman: R. C. CALLAWAY, ABMA SUBCOMMITTEE, Guidance and Control: J. H. W. UNGER, ABMA
III. TRANSPORTATION SYSTEM INTEGRATION, Chairman: F. L. WILLIAMS, ABMA SUBCOMMITTEE, Payload Preparation and Scheduling: CAPTAIN ROBERT MENDENHALL, Quartermaster Corps.
IV. SPACE VEHICLES, Chairman: C. H. BARKER, Jr., ABMA SUBCOMMITTEE, Carrier Vehicles: H. RUPPE, ABMA SUBCOMMITTEE, Payloads: A. WARREN, ABMA
V. COMMUNICATION and SURVEILLANCE SYSTEM, Chairman: S. P. BROWN, Signal Corps
VI. COST AND SCHEDULE: W. G. HUBER, ABMA

The senior representatives of the individual Technical Services on this task force who were assigned the responsibility of coordinating the work on this volume with their respective organizations were:

1. Mr. S. P. BROWN, Communications Department, U. S. Army Signal R&D Laboratory, Fort Monmouth, N. J.

2. Colonel R. H. HOLMES, R&D Division, Office, Surgeon General, Washington, D. C.

3. Mr. H. N. LOWE, Project Director, Office, Chief of Engineers, Washington, D. C.

4. Dr. W. W. DORRELL, Office of the Chief Chemical Officer, Washington, D. C.

5. Colonel A. H. JACKMAN, Assistant Chief of R&E Division, Office, Quartermaster General, Washington, D. C.

6. Lt. Colonel H. R. DELMAR, Chief Transportation Office, AOMC.

7. H. H. KOELLE, Chief, Future Projects Design Branch, Development Operations Division, ABMA, AOMC.

As a consultant, Dr. PAUL SIPLE, noted Antarctic explorer, nade valuable suggestions in regard to personnel problems and eadership of small isolated groups under extremes of environment.

UNCLASSIFIED
CONFIDENTIAL
SECRET

SECRET
UNCLASSIFIED

## (S) CHAPTER II: OUTPOST

The lunar outpost described in this chapter is a permanent facility capable of supporting a complement of 12 men (temporarily 16 men) on a continuing basis. The design provides for expansion of the facility as may be required at a later date.

In designing a lunar installation, it is necessary to substitute needed realism for uncontrolled imagination. The lunar facility herein proposed is devoid of glamor; and is intended to do only one job and do that job well. That job is to serve the men who must stake their lives on its functional adequacy and reliability.

The lunar facility will be compatible with the capabilities and limitations of both the space carrier vehicle delivery system and the men who must do the construction work. In the choice of materials, processes, and techniques, caution has been exercised to select only those which are either now on hand or which can be expected, with a high degree of confidence, to be available at the time needed. The successful accomplishment of this task will not be dependent upon any technological breakthrough or upon any development not provided for in the planned program as described herein. The planned facilities are expected to be benefited, and their cost reduced, by continuing progress in the sciences. It is not realistic, however, to plan such an expedition and commit considerable resources solely on the hope that desirable, but wholly unpredictable, events will occur within a given period of time.

The principal function of the outpost will be to sustain its inhabitants in an environment which is more hostile than any heretofore encountered by man. To do this, the outpost will provide man with an earth-like atmosphere, and at the same time it will protect him from the lunar environment that would otherwise incapacitate or destroy him. Costs and technical factors require austere planning. On the other hand, no needless compromise will be made with requirements of the project or in matters essential to comfort of the operating personnel. These concepts of design will be apparent in the paragraphs below which deal with the specific proposals for the outpost facilities.

UNCLASSIFIED
SECRET

## A. LOCATION

### 1. Site Requirements

The outpost site selected must satisfy three broad requirements: it must be (1) suitable for landing from and departing for earth, (2) suitable for living in shelter, and (3) suitable for carrying out missions which dictate movement over the surface.

a. To be suitable for landing, the surface at the site must be reasonably level, without abrupt irregularities in height which can not be compensated for by the vehicle landing gear, and free from stresses that may result in slides, slip, or collapse of the surface when the lunar vehicle lands. This implies that the area must be readily accessible to pre-landing mapping. The site should also require minimum energy expenditures (and, consequently minimum propellant mass expenditures) to reach. However, if landing sites and earth-return launch sites are to be close together, energy requirements for landing must be weighted against energy requirements for subsequent return to earth.

b. To be suitable for living in shelter, the lunar surface must be free of dangerous residual stresses which would react disastrously to the weight of the outpost facilities or to the action of explosives and construction machinery. Methods must be developed to work the lunar material without excess expenditure of energy. Communications with earth must be possible at all times; full visibility of the outpost from earth would be desirable from a safety view-point. Since at least part of the outpost facilities will be sub-surface, the location must be such as to provide an equable living temperature with minimum drain upon the outpost power supply for heating. Finally, the site must provide easy accessibility to the landing sites for emergency and normal supply vehicles, while maintaining construction activities at a safe distance.

c. To be suitable for carrying out activities of the future, as well as those herein discussed, the site must provide expansion capabilities. It should allow ready access to other areas such as launch sites, new outposts, and areas of special interest or significance. This means that the site must not be located within a crater necessitating continuing ascent and descent of the rim, or traverse across possibly dangerous areas. Heights suitable for surveillance stations, and for solar-energy installations, etc., should be near by; also, a suitable

SECRET
CONFIDENTIAL
UNCLASSIFIED

astronomical observatory site must be available.

2. List of Sites to be Considered

Of the above requirements, those under 1.a will limit the area of consideration to about ± 20° latitude/longitude from the mean optical center of the moon (See Fig. II-1); the requirements of 1.b and 1.c further limit consideration to sites in maria, sinus, or other presumably flat areas and no too far from the boundary of these areas. The process of limitation cannot be carried much farther at the present state of knowledge of the lunar surface. The initial choices for sites are therefore sufficiently numerous to allow further selection as mapping and environmental data are improved. The principal sites that will be studied further are (See Fig. II-2):

a. Sinus Medii (e.g. SE portion, or Triesnecker)

b. Sinus Aestuum, near Eratosthenes

c. Mare Imbrium, NW of Copernicus

d. Mare Imbrium, NW Shore NE of Archimedes

e. Mare Imbrium, NE edge of Apennines

f. Oceanus Procellarum, near Landsberg

g. Ptolemaeus, near Alphonsus

h. Mare Nubium, SE of Alphonsus

i. Mare Imbrium, near Plato

3. Mapping Requirements

a. The first information on the landing site will come from a study of earth-based photography as part of existing requirements in astro-geodesy. The Army Map Service has already begun work on a map of the entire visible lunar surface. This map is to be of a scale of 1:5,000,000 with 2,000-foot contour intervals. The map will be made by stereo methods from already existing lunar photographs and will be consistent, as precisely as possible, to the lunar data established at the rim by Dr. Watts of the U. S. Naval Observatory. This map

UNCLASSIFIED
CONFIDENTIAL
SECRET




Fig. II-1. Map of Moon with Areas of Interest for Landing Site
(±20° Latitude and Longitude)

SECRET
CONFIDENTIAL
UNCLASSIFIED

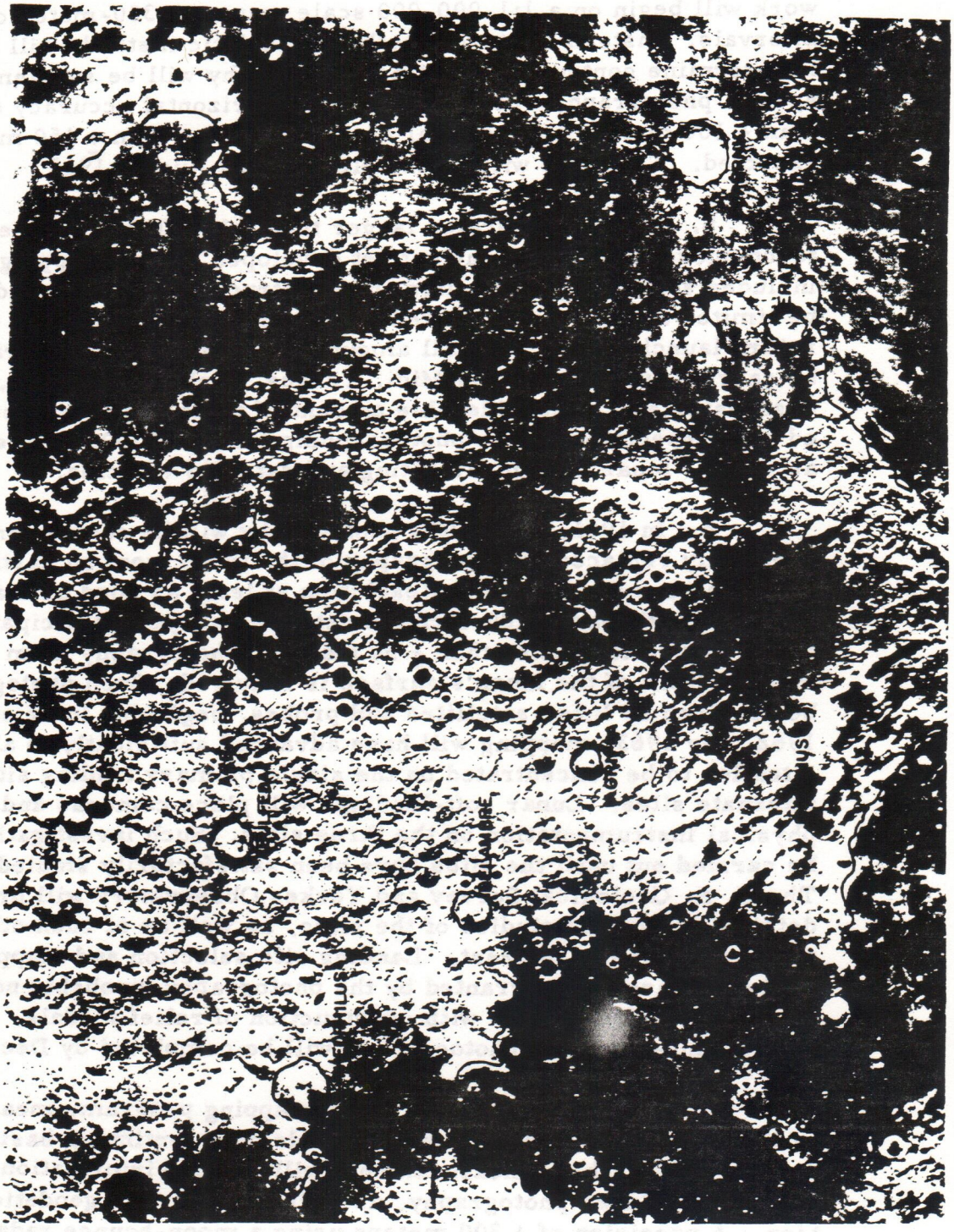

Fig. II-2. Enlargement of Lunar Area of Interest with Most Promising Outpost Locations

UNCLASSIFIED
CONFIDENTIAL
SECRET

will be completed on or about 1 December 1960. About September 1959, work will begin on a 1:1,000,000 scale map with 300-meter contour intervals. Instead of stereo methods, analytic methods will be used to determine contours. Existing photography will be supplemented by special photography where necessary. Horizontal accuracy of better than ± 100 meters and vertical accuracy of less than ± 150 meters are expected. This map will be completed about August 1962.

b. Mapping at scales larger than 1:1,000,000 will require techniques and photography not yet developed. Such mapping (which includes selenographic studies and construction of relief models) will be limited to the areas selected for consideration as landing and earth-return launch sites. A small amount of earth-based photography will be carried out from Pic du Midi, Yerkes, Lick, Mt. Wilson, and other observatories. A considerable amount of photography will be accomplished using special cameras photographing from SKYHOOK-type platforms, as well as lunar circumnavigating and satellite vehicles.

c. In 1961, SKYHOOK photography will be supplemented and eventually replaced by photography of the moon from an earth-orbiting telescope camera system. Resolution at least as good as that obtained from an earth-based 100-inch diameter telescope is anticipated. To obtain resolution better than ± 50 meters, photography from points within 500km of the moon's surface is required. Such photography will be provided by lunar satellites and probes, beginning in or earlier than 1962. By 1963, mapping will have advanced sufficiently to allow attention to be concentrated on the single primary landing site and two alternate sites. Lunar soft-landings will place cameras and selenophysical instrumentation on the three sites. Such investigations will be carried out until the sites have been satisfactorily studied and mapped. The U. S. Geological Survey and Yerkes Observatory will prepare detailed geological studies of the sites, as well as of such other areas as may become of interest. Landing site selection and mapping, at scales as large as warranted by the photography (probably not larger than 1:10,000), together with construction of relief models, relief maps and landing-approach photographs, will be completed by December 1964.

d. As an integral part of the mapping program, measurements of the earth-moon distance will be made on a continuing basis starting in July 1959. These measurements will provide information on the scale of the lunar photography, as well as important geodetic information. A precision of ± 300 meters using a moon-bounce radar technique has already been obtained by the Naval Research Laboratory. The

CONFIDENTIAL
SECRET
UNCLASSIFIED

precision will be further increased by landing a transponder powered by solar cells at a known point on the lunar surface (probably on Sinus Medii) in 1963.

4. Final Sites

At present, there is a lack of sufficiently detailed knowledge of lunar structure and topography to permit selection of sites for landing and outpost construction. The site requirements previously outlined suggest, however, that suitable sites for the outpost exist in the northern part of Sinus Aestuum, near Eratosthenes, in the southern part of Sinus Aestuum near the Sinus Medii, and on the southwest coast of the Mare Imbrium, just north of the Appennies. (See Fig. II-2).

## B. DESIGN CRITERIA

1. Astrophysical

Significant astrophysical data important to the design and operation of a lunar outpost are tabulated in Table II-1. Through the use of celestial mechanics and astrophysics, it is possible to derive from observations of the moon many physical quantities. Factors influencing the design of a lunar outpost as opposed to an earth installation, therefore, have their origin in combined theoretical and observational evaluations.

As a primary effect, the moon's approximate 1000-mile radius results in a limited range of visibility on the surface. For simplicity in calculations for this effect, the moon is considered to be a perfect sphere. A man six feet tall has a horizon of less than two miles. Even from a height of 24,000 feet the horizon extends only a little more than 100 miles. Taken in conjunction with the absence of steep slopes in the areas under consideration this means that a man can lose visible contact while still not far from the outpost unless special precautions are taken. In addition to the lack of atmospheric propagation enhancements, communications are restricted due to this limited line of sight visibility. Special techniques will be devised to offset these disadvantages.

With a surface gravity of 0.162 earth gravity, a man can lift six times as much mass as he could on earth - provided he maintains a proper state of stability and is not unduly handicapped by his lunar suit. Some machines, such as a power shovel or dump truck, cannot fulfill the stability criterion in their present form of mass distribution.

UNCLASSIFIED
CONFIDENTIAL
SECRET

TABLE II-1
ASTRONOMICAL AND ASTROPHYSICAL QUANTITIES
FOR THE MOON

| | |
|---|---|
| Diameter, true | 2160 miles |
| Apparent angular, at mean distance from Earth | 31' 05.16" |
| Circumference | 6785 miles |
| Area | 14,660,000 square miles |
| Volume | $5.275 \times 10^9$ cubic miles |
| Mass | $16.20 \times 10^{22}$ pounds<br>$8.10 \times 10^{19}$ tons<br>0.012 earth mass |
| Specific gravity | 3.33 |
| Acceleration of gravity at surface | 5.31 ft/sec$^2$<br>0.162 earth gravity |
| Escape velocity at surface | 1.479 miles/second |
| Orbit, eccentricity | 0.0549 |
| Inclination to ecliptic | 5°08' 33" |
| Inclination to Earth's equator | 18°19' to 28°35' |
| Distance from Earth, maximum | 252,724 miles |
| Average | 238,856 miles |
| Minimum | 221,475 miles |
| Velocity, average, linear | 0.63 miles/second |
| Angular | 13.1764° per day |

CONFIDENTIAL
SECRET
UNCLASSIFIED

TABLE II-1 con't

| | |
|---|---|
| Transit interval, average | $24^h\ 50.47^m$ |
| Month, nodical (from node to node) | 27d. 212220 |
| tropical (from equinox to equinox) | 27d. 321 582 - $(2 \times 10^{-6} T)$ d |
| sidereal (from star to same star) | 27d. 321 661 - $(2 \times 10^{-6} T)$ d |
| anomalistic (from perigee to perigee) | 27d. 594 551 - $(14 \times 10^{-6} T)$ d |
| synodical (from new moon to new moon) | 29d. 530 588 - $(2 \times 10^{-6} T)$ d |
| Period of node | 18.6134 tropical years |
| Libration in longitude | $8^\circ$ (approximately) |
| in latitude | $6^\circ 50'$ (approximately) |
| daily | $1^\circ 02'$ (approximately) |
| Equilibrium point, dynamic | 0.85 lunar distance |
| static | 0.9 lunar distance |
| Inclination, Moon's equator to ecliptic | $1^\circ 32.1'$ (mean) |
| Albedo | 0.07 |
| Brightness (full moon) | 0.25 candle-meter |
| (average) visual | -12.74 mag |
| photographic | -11.64 mag |
| Color index | +1.10 |
| Temperature, surface, maximum | $+248^\circ$ F |
| minimum | $-202^\circ$ F |
| at poles, in line of sight | $+153^\circ$ F |

UNCLASSIFIED
CONFIDENTIAL
SECRET

TABLE II-1 cont

| | |
|---|---|
| sub-surface, maximum (at equator) | -40°F |
| Temperature, black-body, at mean Lunar distance | 277° R |
| body with zero conductivity and zero rotation | 392° R |
| Magnetic field | less than 200 gamma |
| Atmosphere, surface | less than $10^{-12}$ Earth atmospheres |
| Topography: mountain heights | up to 29-30,000 feet |
| crater rim heights | up to 24,000 feet |
| crater diameters | up to 150 miles |
| crater side slopes | up to 34° |
| Surface curvature | 2.45 feet per mile |
| d: Sidereal day | |
| T: Tropical century since 1900 | |

Likewise, other machines, such as the bulldozer, will have to be weighted to maintain the power-to-traction ratio, as will simple tools like jackhammers, tampers, etc. The use of explosives will be extremely dangerous because the range of fragments will be increased more than six times; while penetration, which varies as the square of the velocity, will also be a more severe problem since there is no atmospheric drag attenuation of velocity. An effect of the lunar gravity, which will be important in the survey of the site, will be experienced in leveling transits. Rather than redesign the bubble vials, it may be necessary to resort to optical plummets.

The temperature effects on the moon are extremely interesting. The moon rotates about the earth at the rate of about 1/2° per hour. Since there is almost no atmosphere, two points on the surface a few inches apart with one lying in the sunlight and the other in shade will be at temperatures several hundred degrees apart and will remain so

for hours. If one point is north of the other, the difference may persist over several earth days. Although heat conduction will tend to equalize temperature differences to some extent, all objects on the surface will be affected - transmission cables, above-surface structures, machinery, etc. Thomson and Seebeck effects will occur on a large scale, while differential thermal expansion will be just as important as total expansion. The vertical temperature gradient may be less than the horizontal, but it will be cyclic about a mean temperature of minus 40° F. Most of the living quarters will be sub-surface in the minus 40°F environment; but the surface connection will have to allow for the cyclic gradient.

The near total absence of an atmosphere means that all the solar and cosmic radiation will come through to the surface. Effects not occuring naturally on the earth's surface will occur as a matter of course on the moon's surface. One such effect will be accumulation of charge on metals through the photoelectric effect. It may be expected that there will be some leakage of oxygen from suits and other enclosed structures. This oxygen will be absorbed to some extent on the exterior of the suit or structure, where it will be converted to ozone and ionic oxygen radicals by ultraviolet radiation. Retainment at joints may be a severe problem.

Vehicles and personnel moving across the surface of the moon will tend to acquire a charge just as do moving bodies on the surface of the earth. The moon's surface is, however, an excellent insulator, and the charged bodies are in a vacuum. Another source of negative charge is the solar radiation. Design of the outpost facilities must provide for draining of such accumulated charge. The problem is quite closely connected with the general problem of providing electrical power supply and communications, since the insulating character of the surface means that equipment cannot be "grounded" to a common zero-potential as on earth. "Ground" arrangements will undoubtedly be more complex than on earth but not a serious problem.

## 2. Environmental Requirements

The prime requisite in design of the lunar outpost is to provide an environment in which man can live, and which, in so far as practical, is representative of earth conditions. The environmental requirements for the lunar man are tabulated in Table II-2. Maintaining this environment on the moon requires creation and control of an artificial atmosphere in special shelters. Air conditioning equipment capable of

TABLE II-2

ENVIRONMENTAL REQUIREMENTS FOR MAN

| FACTORS | LIMITS | REMARKS |
|---|---|---|
| Oxygen | 20.7% | Optimum 3 lb/man/day |
| Nitrogen | 78% | Optimum. Other substitutes will be considered |
| Inert Gases | 1% | Optimum |
| Carbon Dioxide | 0.3 - 0.5% | Maximum for continuous exposure. Lower percentages desirable |
| Pressure | 14.7 psi | Optimum |
| Humidity | 60% | Optimum |
| Temperature | 65°-68°F | Optimum |
| Radiation | 0.1 mrep/day | Optimum tolerance; greatly increased limits permissible if required by situation |
| Noise | 30-40 db | Maximum from viewpoint of comfort |
| Carbon Monoxide | 50 ppm | Maximum for continuous exposure |
| Water | 6 lb/day | Maximum. Recovery not considered |
| Food | 4 lb/day | Concentrated and partially dehydrated |
| Light | | Prolonged periods of absolute darkness to be avoided |

CONFIDENTIAL
CONFIDENTIAL
UNCLASSIFIED

removing carbon dioxide, controlling humidity, and maintaining comfortable temperatures must be operated continuously. In sealed shelters, special design features are necessary to prevent excessive noise levels. All these requirements are basic and establish primary criteria for design of the outpost.

3. Human Engineering Considerations

Since man performs certain tasks at the lunar outpost, both in shelters and in the open, his physical characteristics and capabilities were carefully considered. These requirements for an assumed "standard" man are listed in Table II-3. Design of shelter doors, passageways, headroom, sleeping area, and access to installed facilities are provided for this typical individual. Very important are his capabilities when in a lunar suit. He becomes much bigger dimensionally and volume-wise, moves much slower, cannot climb or step over high projections, is restricted in his arm movements, vision and lifting capacity, and has less stability. In construction and operation of the outpost, these are important factors. Mechanical and electrical devices must be designed to be operative by men wearing lunar suits.

4. Space Vehicle Delivery System Influence on Design

In design of the outpost, maximum use will be made of these equipment components which are part of the incoming space vehicles. Vehicle cargo containers and propellant tanks will be used as far as practicable in constructing the outpost facilities. Design criteria have been used consistent with the vehicle cargo compartment being a metal tank 10 feet in diameter, 20 feet in length, and having a payload capacity of 6,000 pounds. The basic living-quarter type shelter at the outpost is designed with dimensions and external features equal to the standard cargo tank. Equipment and facilities will be built into the tank on earth, in so far as practical, so that it may be readily converted into a livable shelter on the moon. Also propellant tanks from the landing vehicles having configuration similar to the cargo tank will be utilized. For example, empty propellant tanks will be used for providing storage of bulk supplies which must be protected from meteorites and solar radiation. A longitudinal half of a propellant tank will be used as the cargo bed for a towed trailer, and metal cut from propellant tanks will serve as solar shields and meteorite protectors to equipment which must operate in otherwise exposed surface locations.


UNCLASSIFIED
CONFIDENTIAL

TABLE II-3

HUMAN ENGINEERING CONSIDERATIONS

| ASSUMED STANDARD MAN<br>MAN - height, 72 inches; weight, 175 pounds | * Inches |
|---|---|
| Eye height, sitting | 33.1 |
| Eye height, standing | 67.7 |
| Shoulder breadth (bibeltoid) | 19.1 |
| Hip breadth, sitting | 15.1 |
| Arm span (total) | 74.5 |
| Arm reach (normal, from wall behind him) | 36.7 |
| Hand breadth (palm) | 3.69 |
| Knee height, sitting | 23.0 |
| Popliteal height, sitting | 18.0 |
| MAN -- in Lunar Suit with Attachments | |
| Weight (on Moon) | 79 pounds |
| Height, standing | 82 |
| Minimum size of opening for normal passage (Height and Width) | 60 x 30 |
| Maximum height of sill for normal passage | 12 |
| Space required for suit removal (Height, Width, and Breadth) | 84 x 60 x 60 |
| Continuous wear of suit (normal) | 8 hours |
| (acceptable) | 12 hours |
| (w/caution) | 24 hours |
| (emergency) | 72 hours |

*Unless otherwise noted.

SECRET CONFIDENTIAL
UNCLASSIFIED

5. Facilities and Supplies Required for Lunar Outpost

a. Advance Party Outpost (nine men)

The lunar outpost facilities for the advance party, which will be used for housing during the construction of the main outpost, will consist of tank-type living quarters with utilities such as heat, light, air conditioning and all the other interior essentials to provide an earth-like environment. The first two men and also the nine men in the advance party will live in the cabin of the vehicle in which they arrive until they have completed assembly of this advance outpost. It will be their goal to have the advance party quarters completed within 15 days after arrival of the nine-man construction crew. Maximum allowable time for this task is 30 days. Because of the importance of time and adverse environmental conditions, employment of special design and construction techniques is necessary. Three cargo-size tanks, pre-fabricated as living quarters, will be buried with at least three feet of lunar material coverage in a man-made trench. The excavation and backfill will be accomplished with a multi-purpose construction vehicle. These quarters will consist of one air-lock tank and two tanks for sleeping, dining, and general living quarters. Arrangements of the facilities for the advance party outpost when ready for occupancy could be as conceptually shown in Figs. II-3, 4, and 5.

(1) Power

The basic power supply for use immediately after landing and during the preparation of the advanced party construction camp will be a five kw nuclear reactor. The cabin power requirement will be considerably higher after the landing vehicle has arrived on the lunar surface due to operation of the airlock, heating during the lunar night, etc. Power requirements outside the cabin include that needed for hand operation of tools and for production of hydrogen and oxygen (electrolysis of water) for the fuel cells powering the multi-purpose construction vehicle.

The nuclear power plants which are to be assembled to provide power for construction of the outpost facilities are rated at 10 kw and 40 kw. After selection of the outpost site, craters are to be blasted (if no convenient ones are found) for the power plants. To provide radiation shielding, lunar material not less than 12 feet in thickness is required. Therefore, the reactor cores will be placed at sub-surface levels or behind mounds. The 10 kw plant can be easily

UNCLASSIFIED
SECRET CONFIDENTIAL

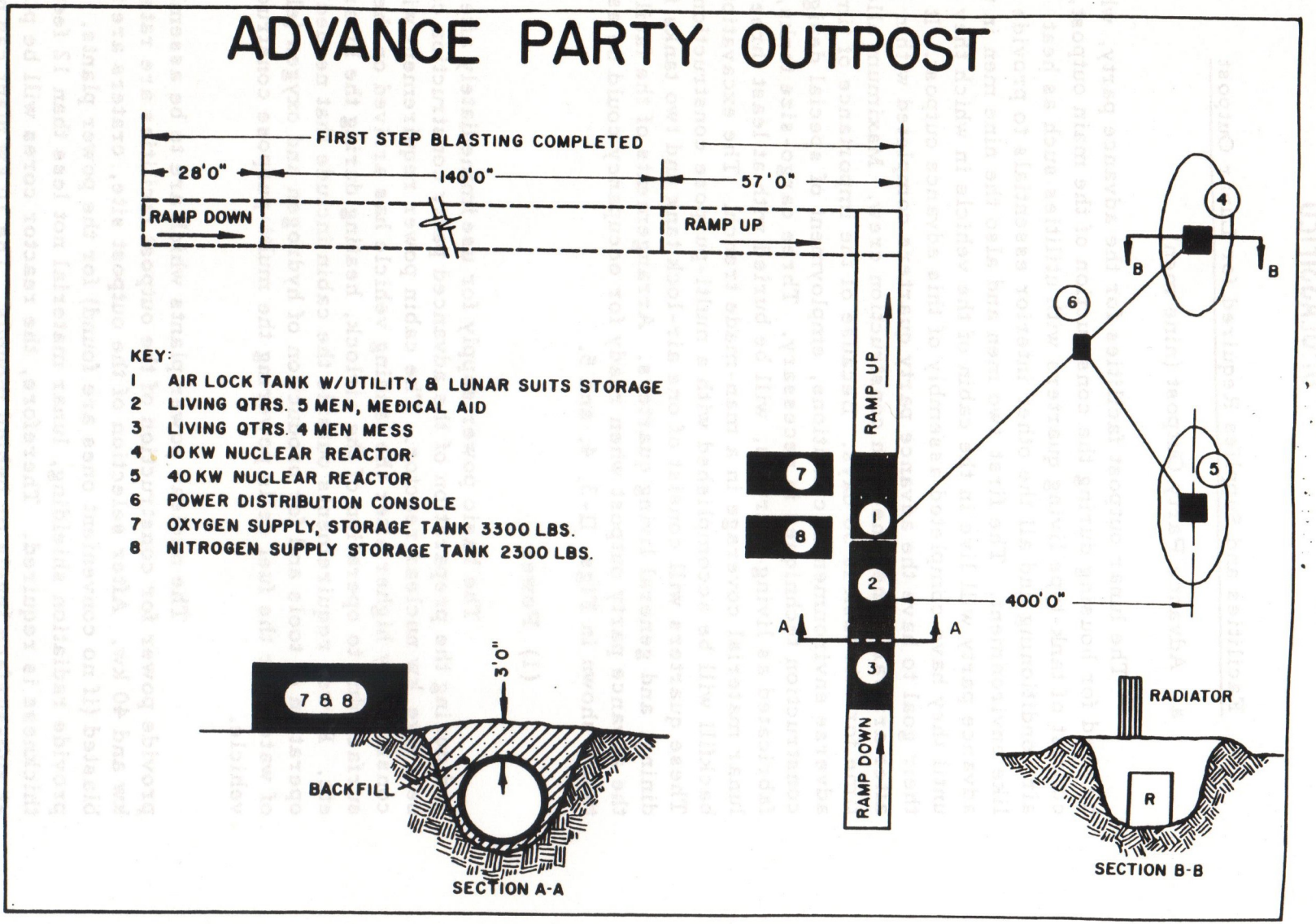


Fig. II-3. Layout of Initial Construction Camp



CONFIDENTIAL

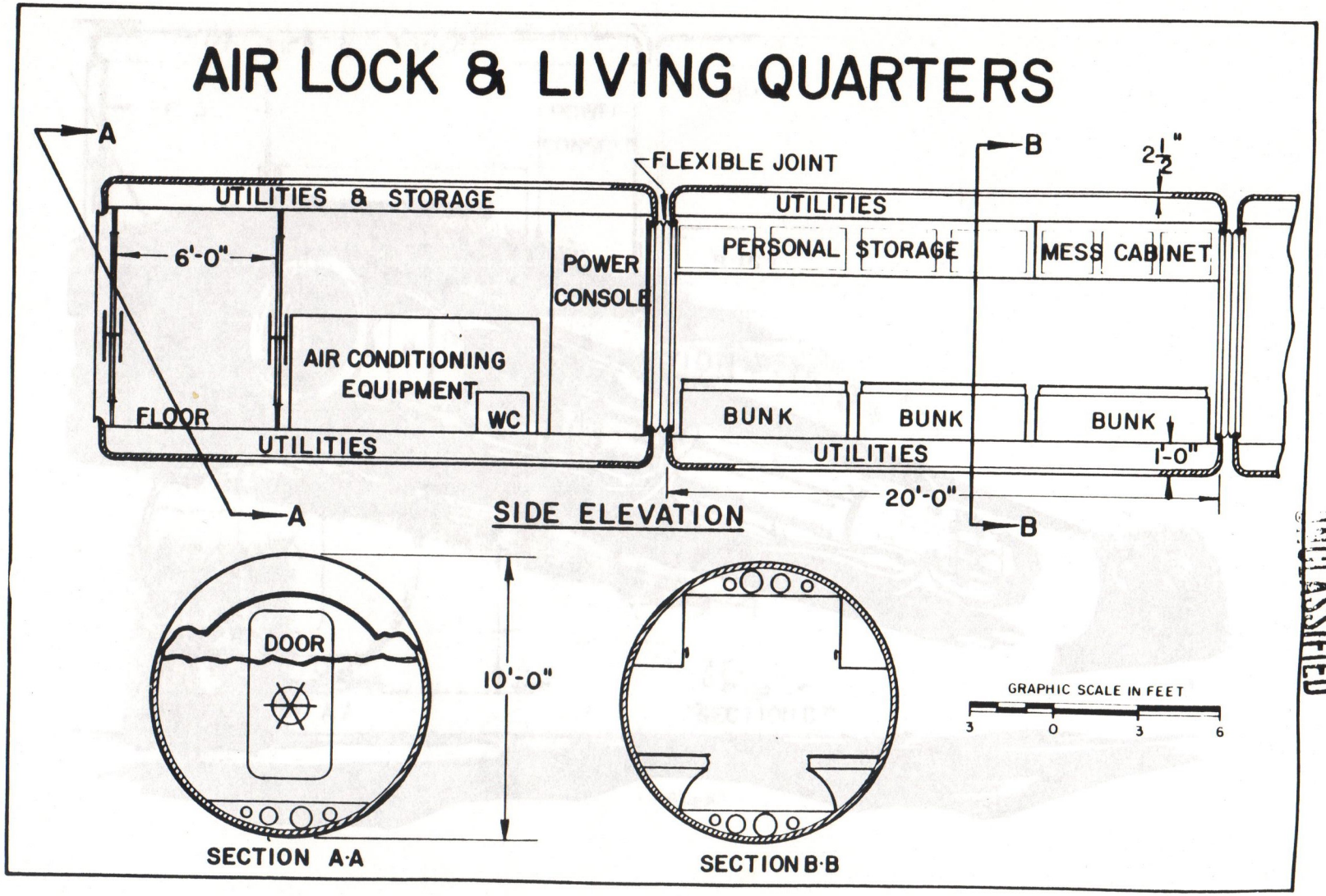


Fig. II-4. Cross-Section of Typical Outpost Compartments

UNCLASSIFIED
SECRET/SENSITIVE
CONFIDENTIAL
UNCLASSIFIED

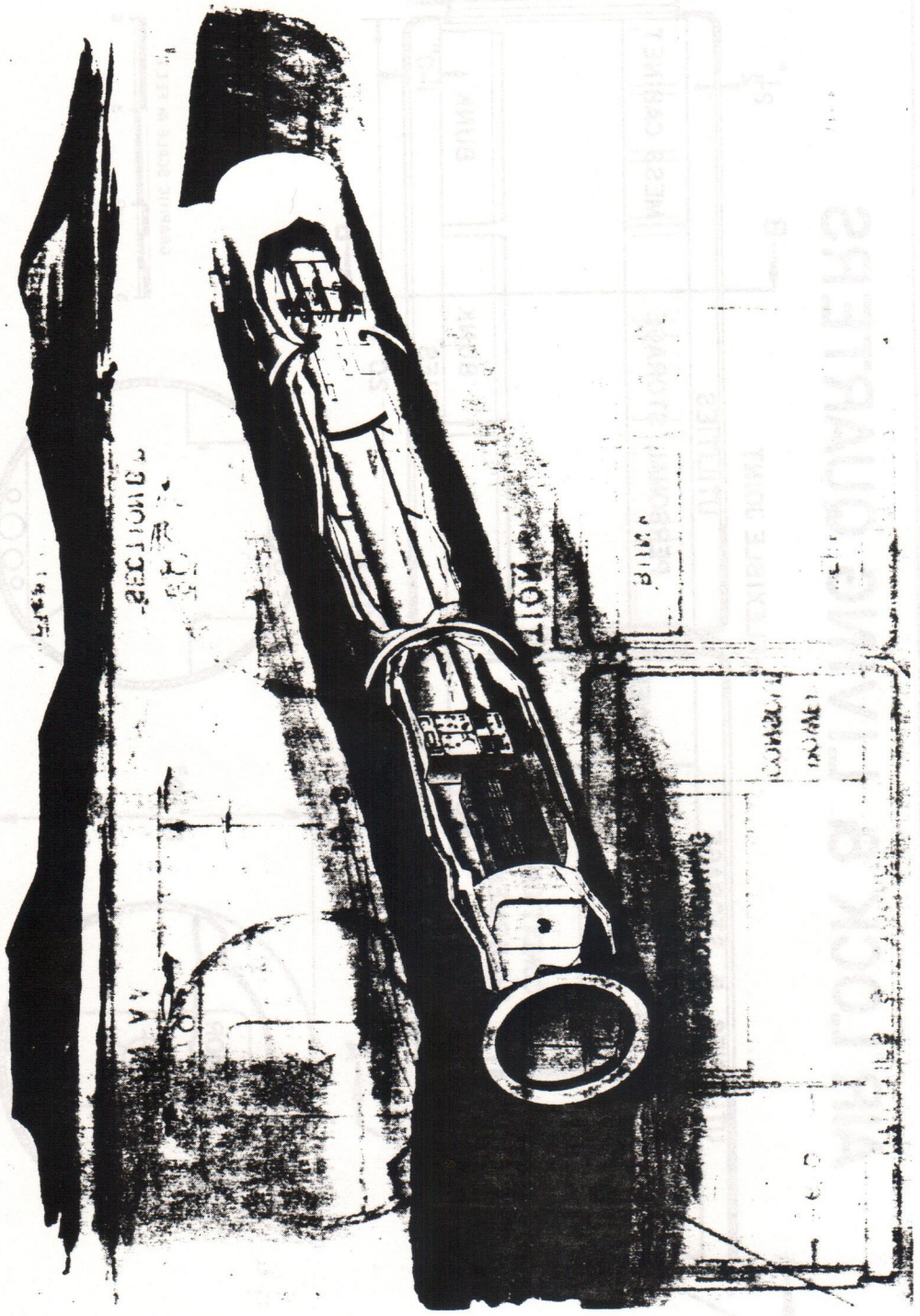

Fig. II-5. Overall View of Initial Construction Camp

SECRET
CONFIDENTIAL
UNCLASSIFIED

hand-carried to its site, its radiator assembled and connected, and its power cable connected to the cabin. The larger plant can then be assembled and used to supplement power for construction equipment. When the initial living quarters are completed, the 40 kw plant will supply power required for occupancy, while the 10 kw plant will serve as emergency and standby power reserve.

Nuclear reactors were selected as the basic power sources since no other source can compete on a pound per kw-hour basis. Solar devices might be competitive except for the 14-day lunar night and the difficulty of storing energy in either form as heat or as electricity. Various means of converting nuclear heat energy to electricity are under study at present. It is unlikely that thermoelectric, thermionic, or any other means of conversion will be superior to the turbo-generator on a weight basis. If metallurgical developments allow very high reactor core temperatures within the next few years, a closed Brayton power cycle might be used; although the mercury Rankine cycle performs very adequately at temperatures attainable at present. In the mercury Rankine cycle, sodium or lithium (reactor core coolant), maximum temperatures are 1200°F - 1300°F. The mercury vapor enters the turbine at 1100°F - 1200°F and condenses at about 600°F. With these easily attainable temperatures, plant weights are about 800 and 1700 pounds and radiator areas (one side) are about 150 and 400 square feet for the 10 kw and 40 kw plants, respectively. The radiators are not radioactive and are erected vertically above the plant craters and protected from meteoroid penetration by sheds of rough construction. This can be accomplished by utilizing metal cut from parts of vehicles not designed for other purposes. The radiation dosage rates received by a man 50 feet or more from the plants will be well below 300 milirem per week, the allowable laboratory dosage. The plants can be shut down and approached for short periods for adjustment and maintenance, and if properly designed can be refueled without exceeding emergency dose tolerances. The maximum credible accident, including core meltdown, pressure vessel rupture, and gaseous fission product release would not require evacuation of quarters. The probability of the occurrence of such an accident is extremely low, since these plants will have the usual safety devices designed to prevent high neutron flux, high temperatures, or any other dangerous condition.

The 10 kw and 40 kw power plants will be assembled about 100 feet apart and 300-400 feet from the outpost living quarters location. For the early stages of construction an external distribution



UNCLASSIFIED
CONFIDENTIAL

box containing fuse protection, excess load power bleed-off, and power from the reactors. After the living quarters have been located, the power will be transmitted to a control console located in the air lock tank. The console will provide the necessary power factor correction, fuse and voltage regulators, and circuit monitoring. Transmission cable from the reactor (2-inch diameter Teflon insulated silver coated aluminum), will be buried about six inches beneath the surface. This wire will operate over a temperature range of -200°F to +300°F, and when buried will be protected from ultraviolet radiation, which might otherwise have an adverse effect on cable insulation. Power available within the shelters will be 110/220 volt three-wire AC (400 cycle). A rectifier will be installed to convert some of the power to DC. Estimates for the advance outpost requirements reveal that the peak power requirements will be 44kw, of which 10 kw AC is the intermittent load. A rectifier will be installed to provide the 14 kw DC power needed for battery charging and the fuel cell electrolysis requirements.

(2) Multi-Purpose Construction Vehicle

Electric power will be provided soon after arrival of the advance party personnel for operation of a multi-purpose construction vehicle, as shown in Fig. II-6. The vehicle is capable of performing general construction work to include the moving of lunar material, excavation of sub-surface trenches, heavy cargo handling, prime mover functions, and other mechanical work which man alone in a lunar suit cannot perform. To increase its heavy duty work potential, the light weight vehicle (4500 pounds), will be ballastable up to twice its empty weight. It will be powered by two 4 hp electric motors, one at each rear wheel. Electric power will be generated by a fuel cell installed directly over the rear axle. The vehicle will be self-loading by means of a dirt bowl located between the front and rear axle. The wheels will be all metal and four feet in diameter with 1-1/2 inch diamond shaped grousers to improve traction. The vehicle will be approximately 15 feet long, six feet wide and six feet high. It will be capable of being operated remotely by control transmission cables or radio. A removable pressurized cab will be provided for the operator so he may work without a full lunar suit.

The vehicle will be capable of a speed range up to 1-1/2 mph for heavy duty work and up to 5 mph for cross country operation. Attachments will include fork lift arms, rooter teeth, "U" dozer blade, winch, crane boom and power take-off for other components such as a

CONFIDENTIAL
SECRET
UNCLASSIFIED



Fig. II-6. Typical Lunar Construction Vehicle

UNCLASSIFIED
SECRET
CONFIDENTIAL

ground auger. The work capabilities of the tractor with a bowl capacity of 43 cubic feet are estimated to be as follows: 480 cubic feet per hour, dozing over a distance of 250 feet; 750 cubic feet per hour, dozing and scraping combination over the same distance. These estimates are subject to possible substantial revision as more knowledge is gained of the characteristics of the lunar surface. Cargo-lift capability will be approximately 4, 500 pounds to a two foot height with a 10 foot reach. As a prime mover, the unit will have a drawbar pull of approximately 50% of the gross weight plus ballast.

The cargo containers and quarters will be towed by means of a simple trailer body comprised of an axle yoke assembly fastened to the tank. Steel wheels will be the same size as on the tractor for maximum interchangeability of components. An empty propellant tank obtained from one of the landed vehicles will be cut longitudinally in half with an electric power saw. This half mounted in the axle yoke assembly provides a trailer for transport of other packaged cargo and supplies.

Explosives will be used to facilitate excavation of trenches for the quarters and craters for the power reactors. Special shaped charges will make shot holes approximately three feet deep. Shot holes will be loaded with high explosive cratering charges to loosen material to an approximate five-foot depth and 14-foot diameter at the surface. The construction vehicle will remove the loosened material from the trench and the explosive pattern repeated to make the trench deeper. To bury the three tank compartments and have three feet of material cover, about 15, 000 cubic feet of material must be removed. The construction vehicle can remove this amount in 19 hours and backfill in an additional six hours, after the tanks have been installed.

(3) Quarters

The standard building block for the quarters will be right circular cylindrical tanks 10 feet in outside diameter by 20 feet in length, similar in size and shape to the cargo compartment of the landing vehicle. These standard tanks will be used for both the advance party outpost and the final outpost. They will be of double-wall construction separated by a one-inch vacuum space filled with an insulating material having heat transfer coefficient of $3 \times 10^{-5}$ Btu/hour square feet. Titanium alloy will be used for fabrication of the outer and inner skins. This material was selected because of its light weight, high

tensile strength, corrosion resistance, and low thermal conductivity (about 7% of conductivity for applicable aluminum alloys). Metal floor plates pre-installed in the tanks will provide a walkway six feet wide. Similar plate will be installed as a ceiling. Space above and below these plates will be used for utilities and storage compartments. The tanks will be joined in series as shown in Fig. II-5 by means of flexible connectors which will permit a walk-through passage between tanks. The tanks shown as living quarters will contain installed facilities such as fold away bunks, an electric device for food preparation and melting ice, cabinets for personal items and short period storage of food and water. A section of the floor decking will be hinged so that the passageway to any adjacent compartment may be sealed in event of an emergency. The air lock tank will be similar except that one end will be equipped with a six-foot long chamber in which the pressure can be lowered to about 0.2 psi in about 10 minutes. This means that approximately 1/2 pound of air will be lost whenever the outside chamber door is opened. Controls will permit opening the door only when the pressure in the chamber is 0.2 psi or less. Similarly the air lock door to the interior of the tank compartment can be opened only when the chamber air pressure is approximately 14.7 psi.

(a) Quarters Heat and Light Requirements

The outpost quarters will be heated electrically. Heat may enter or leave the inner cylinder by both radiation and conduction. The heating requirements are low because the radiation loss through the vacuum wall construction will be only 25 watts per tank and with the low heat conductivity of titanium and surrounding lunar material the construction loss will be about 30 watts. Based on these calculations a lower limit of 60 watts and an upper limit of 600 watts are established. Heat losses will be greater in the air lock than in the living quarters since one end of the lock will be exposed to the sky and will not have the benefit of covering insulation. Both conduction and radiation losses in the air chamber increase, and calculations indicate that the total heat power requirement for the 20-foot long tank will be between 200 and 1,000 watts.

Light required for each tank was calculated according to the following equation:

$$\text{Lumens} = \frac{\text{illumination} \times \text{area of room}}{\text{utilization factor} \times \text{maintenance factor}}$$

For a ceiling reflectivity of 0.8 and a wall reflectivity of 0.6, the utilization factor is 0.4 and the maintenance factor is 0.8. For a 200 square foot and an illumination level of 50 foot candles, the number of lumens required is about 15,000. This may be produced by about 300 watts of electrical power which under normal conditions will satisfy the heat loss requirements.

(b) Air Conditioning

The creation and control of an earth-like atmosphere must be provided in all shelters or compartments occupied by man. The system must be simple and reliable, while at the same time it must embody relatively complex and sophisticated components such as an automatic air analysis system and associated control devices. Without some compensating process, the composition of the atmosphere would soon become incapable of supporting life. Creation of such a compensating process is the objective of environmental control. The system envisioned will provide an earth-like atmosphere with regard to pressure and composition.

In the advance party outpost quarters, a replacement type system will be used in which fresh oxygen and nitrogen are continuously supplied as required to replace that consumed and/or lost; carbon dioxide and water are continuously removed as formed. In the early stages of construction and occupancy of the initial outpost, chemical absorbents will be used for carbon dioxide and water vapor removal. Subsequently, this system will be replaced with a removal system utilizing the low temperature freeze-out principle, or with a biological system.

Both oxygen and nitrogen will be transported and stored in the liquid state. This choice is logical considering the high densities (9.51 pounds/gallons for oxygen and 6.77 pounds/gallons for nitrogen), the ready availability of both substances in the liquid form, and payload volume limitations. Because both substances have extremely low boiling points (-297°F for oxygen and -320°F for nitrogen at one atmosphere), they must be stored and shipped in powder-vacuum insulated tanks. Since evaporation rate and storage weight-efficiencies (pound of material/pound empty container) vary inversely with tank size, the largest possible tank consistent with the maximum permissible payload of 6,000 pounds was selected. The same type tank will be used for both oxygen and nitrogen. Initially the tanks will be located on the surface near the living quarters and coated with a reflective material.

Solar radiation will not result in excessive skin temperatures or cause evaporation in excess of consumption rates. When time permits, the tanks will be buried to protect them from meteoroids. The liquid oxygen stored in this tank will supply nine men for 120 days. Liquid nitrogen storage will provide nitrogen for initial pressurization of the three living compartments and meet nitrogen loss requirements of up to 1 pound/compartment/day for at least 200 days.

This surface-stored oxygen and nitrogen will be used for three purposes: (1) recharging of lunar suit containers; (2) initial compartment pressurization; (3) continuous compartment loss replacement. Lunar suit container recharging of both oxygen and nitrogen will be accomplished by use of a small hand-operated pump and vaporizer which pressurizes the liquid to 2,000 psi, vaporizes it at this pressure, and transfers it into empty containers. Distribution to the living quarters will be effected by piping the liquid oxygen and nitrogen from the surface storage tanks to a point inside the quarters. Each stream will be vaporized, heated to 70°F, and injected into the compartment on a demand basis. For initial pressurization of living quarters, the liquids will be regulated through a vaporizer-heater to give a buildup to one atmosphere in about eight hours. The heat requirement for vaporization is 0.5 kw for oxygen and 1.8 kw for nitrogen. After pressurization of the compartments, the oxygen and nitrogen supply will be regulated to satisfy the continuous replacement requirements. Under normal conditions, the atmosphere will be controlled with regard to pressure and composition by a fully automatic indicating and controlling analyzer. This analyzer will be capable of measuring quantitatively oxygen, nitrogen, carbon dioxide, and moisture content. The instrument will be located in the living compartment and will continuously sample the atmosphere, analyze it, and transmit signals to control valves and motors to correct any drifts in pressure or composition.

During the initial occupancy of the living quarters, carbon dioxide and moisture removal will be accomplished by cycling the air through a chemical absorbent and dehumidifier. A solid lithium oxide will provide a carbon dioxide removal potential of from 10 to 14 days. Since this system requires the expenditure of a considerable amount of chemical import, a carbon dioxide freeze-out system will be installed after the quarters are occupied.

(4) Ground Support Equipment for Earth Return Vehicle

The present concept anticipates that the first landing of two persons will be accomplished in a vehicle capable of returning them to earth. An immediate return is considered to be a semi-emergency capability only. In the normal case, this crew would wait until the next group of nine personnel arrive. The latter group will assist in checking out the first return vehicle and the first two men will return to earth. There will be a return flight every three or four months during the entire project. The checkout and launch operation on the lunar surface will require special equipment as well as new techniques and procedures.

The proposed equipment for checkout is based on the assumption that time is not a critical element in the checkout process. The necessary equipment, with a weight requirement of several thousand pounds, dictates a development lead time of 36 months. Ground handling equipment required will be in the 2,000-pound range. An additional weight allotment of this order of magnitude should be made for tools and spare parts to make small repairs possible.

b. Basic Outpost (twelve men)

The arrangement of facilities for the basic twelve-man outpost is shown in Figs. II-7 and II-8. Cargo containers similar to those used for the advance outpost facilities will be buried beneath three feet of lunar material in a trench perpendicular to the line of the advance outpost facilities. The basic tank design for living quarters and air locks will still be used, the only major changes being made in the equipment installed. The utilities will be dispersed throughout the seven tanks reducing congestion which was necessary in the advance outpost. Two compartments for sleeping quarters, each with eight fold-away beds will be provided. The beds may be converted to work benches or tables. Two air-lock compartments will be provided, one at either end of the line of tanks. A dining room compartment will be connected adjacent to the living quarters. This compartment will also serve as a lounge and recreation area. In addition to fold-away benches and tables, there will also be two electric devices for preparation of food, nine cubic feet of freezer storage at 0°F, thirty-three cubic feet of general storage for water and non-perishable foods, and cabinets for utensils and dining equipment. Containers with removable inner liners will be provided for collection of food, kitchen wastes, and cleansing substances. When water is used for cleansing, it will be collected and treated for reuse.

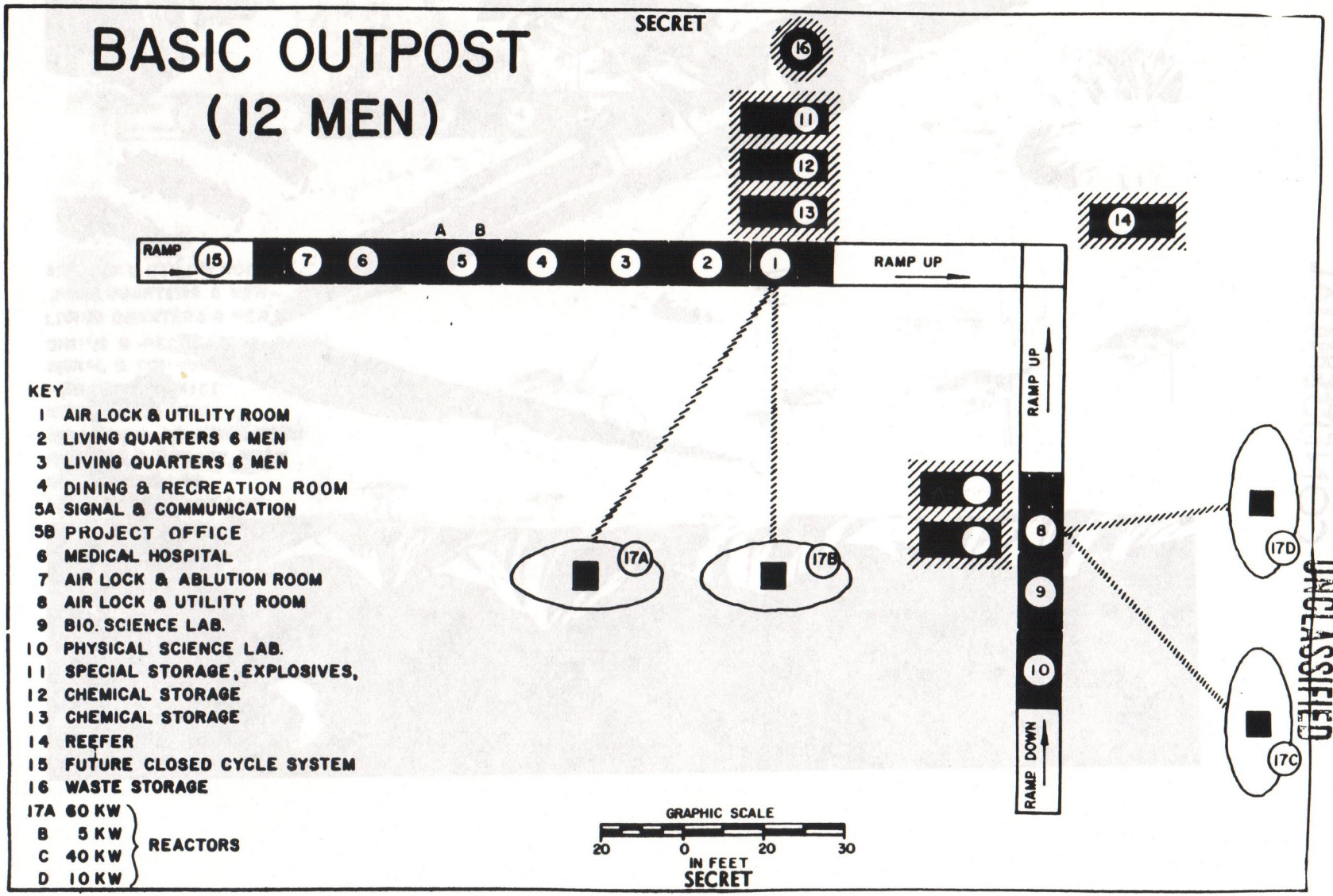


Fig. II-7. Layout of Basic 12-Man Outpost



Fig. II-8. Overall View of 12-Man Outpost

CONFIDENTIAL
SECRET
UNCLASSIFIED

The fifth in-line tank contains the facilities for the project office and space for outpost internal and external communications equipment. There will be an intercom system with subscriber sets in each tank for internal communication. Suitable equipment and instrument cabinets will be provided to house and support the various communication equipment planned for inclusion in the outpost. This will include the lunar terminal of the lunar-earth link, the base station of the lunar VHF net and other items. A more complete description of the overall communications electronic system to be furnished is contained in Chapter IV of this volume. These instruments and controls will weigh about 1,600 pounds and are sectionalized for manual installation after occupancy of the compartment.

The project office will be a section of the tank less than 10 feet long, with table and accessories necessary for recording and maintaining observational data, the outpost daily journal, and other records. An electrical power console also located here will permit control of outpost utilities. An air-lock type door will be provided in the exit passageway of this tank to the adjoining medical laboratory tank. This door can be closed in event of an emergency or as a medical preventative measure.

The medical laboratory will be equipped with an operating table and lamp, cabinets and accessories for surgical and medical instruments, a secure medicine cabinet, X-ray apparatus, controlled refrigeration between $-40^{\circ}F$ and $+40^{\circ}F$, and necessary dental instruments and supplies. There will be a folding bed for recumbency of one patient and a collapsible isolation chamber having a separate air circulation system for treatment of communicable disease cases. The tank adjacent to the medical laboratory is a typical air lock tank with air chamber to the outside which may be converted to a sick ward if required. The medical laboratory will also have facilities and supplies necessary for preventive medical treatments and personnel safety, included will be such items as survey meters for radiological monitoring of water, food and environment, water disinfectants, instruments for determining bacteriological quality of water and food, and other items needed to maintain the mental, physical, and spiritual welfare of all personnel.

The air lock tank adjoining the medical laboratory will serve as an ablution room. Urinals, bucket-type toilet facilities and activated carbon air filters for odor control will be provided. Urine collected in removable containers will periodically carried to an

UNCLASSIFIED
SECRET
CONFIDENTIAL

outside freezing storage location and held for contemplated future processing. Feces and solid wastes also collected in removable containers will be periodically placed in an outside storage tank for subsequent disposal. Bathing facilities are also provided in the air lock compartment next to the medical compartment and all cleansing water will be collected and used for other purposes.

When the above compartments have been installed and are available for occupancy as living quarters, the advance party will move into the quarters provided in this basic outpost. Two empty tanks of the advance outpost will be converted to laboratories; one to a bio-science laboratory and one to a physical science laboratory. The air lock tank with its utilities will remain unchanged. All laboratory benches, cabinets and accessories will be prefabricated and sectionalized so that they will clear a doorway three feet wide, six feet high. The bio-science laboratory will be equipped for analytical chemistry, bacteriology, microscopy and radiological study and measurements. There will be laboratory equipment such as a microscope, centrifuge, incubator, distilling apparatus, photometers, titration equipment, radiological survey meters, etc. These items are relatively small and portable, requiring little electric power and no special installation provisions. An enclosed hood that can be evacuated, equipped with protected hand holes and mechanical manipulators, will be installed. Into this hood unidentifiable specimens of materials of unknown toxicity can be introduced for examination. The laboratory will also have facilities for the containment and care of small animals such as guinea pigs which are being held for observation and test purposes.

Facilities for equipping the physical science laboratory will be handled similarly to the bio-science laboratory. The former will have facilities and equipment to obtain preliminary information relative to some of the following areas of interest:

(1) Physical and chemical characteristics of selenological specimens.

(2) Infrared, visible, ultraviolet, X-ray, gamma ray, and cosmic ray spectroscopy.

(3) Lunar atmosphere measurements of pressure, density, meteoroid bombardment rate and galactic dust.

(4) Astronomical observations of the planets and stars.

CONFIDENTIAL SECRET UNCLASSIFIED

(5) Measurements of magnetic field of the moon.

(6) Surface and sub-surface thermal and mechanical properties.

(7) Determination of lunar gravitational constant and seismic conditions.

The completed basic outpost will consist of 10 sub-surface personnel compartments, three of which will be air locks partially used for shelter and operation of essential utilities. The electrical power supply will be increased by addition of one five kw and one 60 kw nuclear reactor (See Fig. II-9) to the 10 kw and 40 kw power supply already installed for the advance outpost. The five kw reactor, which initially was placed in operation for power to the first lunar personnel, will be relocated if necessary for power input to the basic outpost. The four nuclear reactors will provide a flexible supply of power in the event shutdown of a reactor is necessary. In an emergency, the five kw reactor, alone, is adequate to keep essential life support equipment in operation for 12 men. The air conditioning equipment for the basic outpost will be identical to equipment for the advance outpost. In emergencies one plant will be capable of handling the air conditioning requirements for the complete outpost.

Empty fuel tanks will be utilized for storing bulk supplies. After one end has been removed with an electric saw, the tanks will be covered with excess material from previous excavations. This coverage will provide meteoroid protection and insulation from solar radiation. Four of these tanks will be located near the entrance ramps to the quarters. Two tanks will provide storage space for the oxygen and nitrogen supply; one tank refrigerated storage for food and water, and one tank storage for explosives and other such materials. The tank openings will be oriented and shades improvised from scrap metal plates to minimize reflection of solar radiation into the storage areas. With proper orientation (improvised shade and reflective door to reduce solar radiation, and thermal barriers to tank walls), food can be stored in one tank at sub-freezing temperatures. The multi-purpose construction vehicle, shown in Fig. II-6, and cargo trailer will transport the bulk supplies from the vehicle landing sites directly to the tank storage. The insulated containers in which the oxygen and nitrogen are stored are designed so that four of them may be readily placed in one storage tank.



UNCLASSIFIED SECRET CONFIDENTIAL

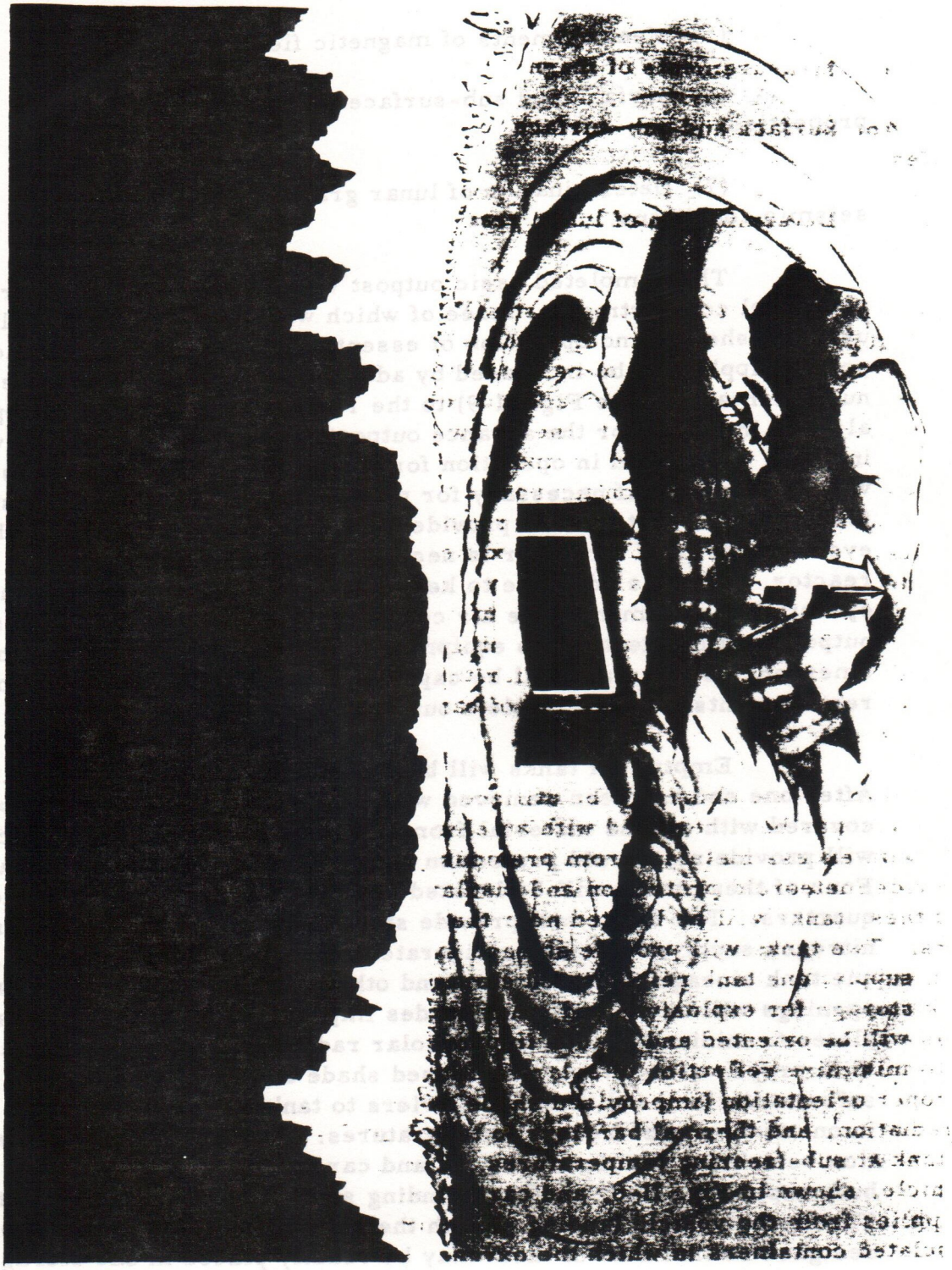

Fig. II-9. Nuclear Power Plant on Moon (60 kw)

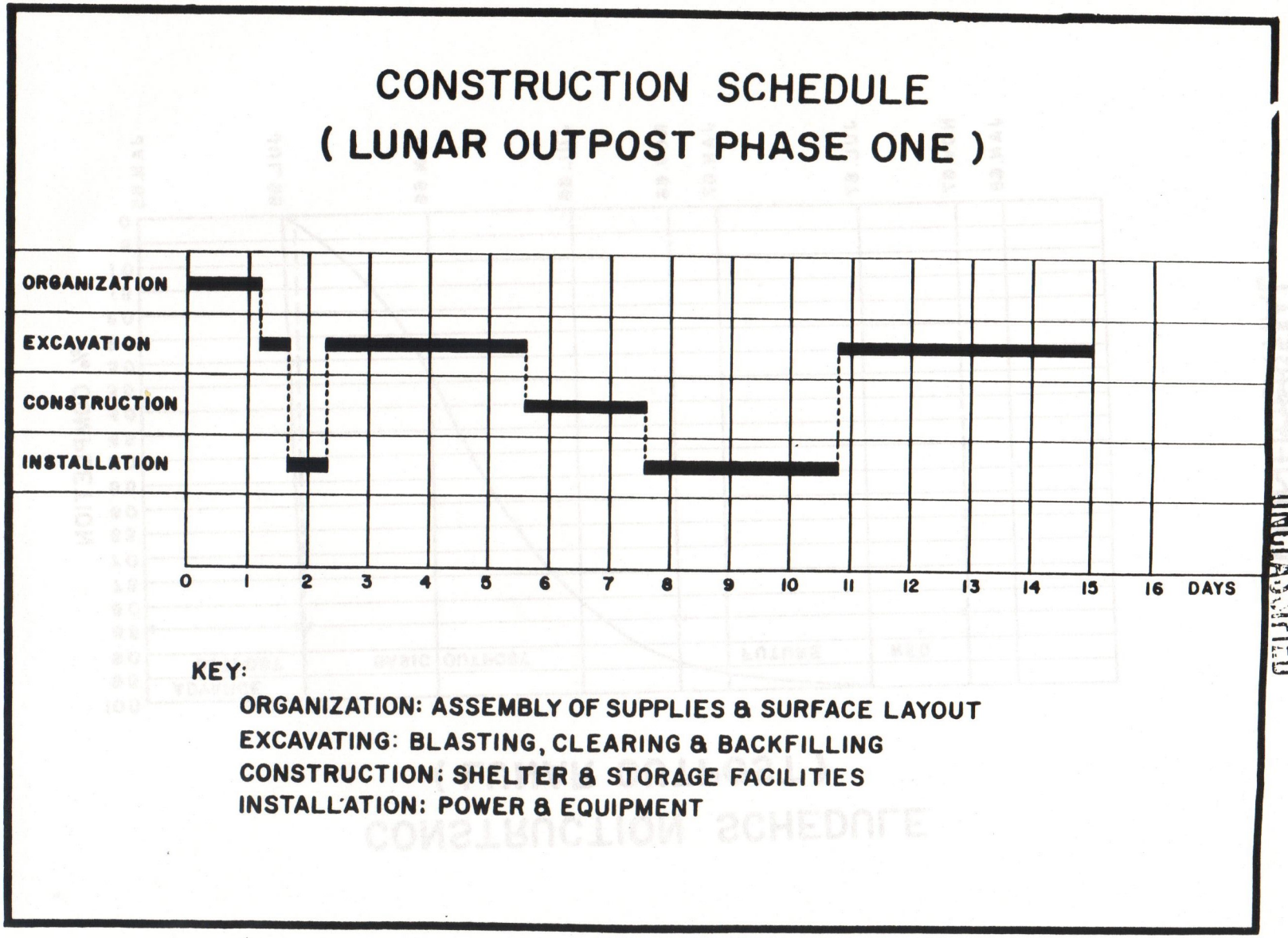


Fig. II-10. Schedule for Initial Construction Camp

CONFIDENTIAL



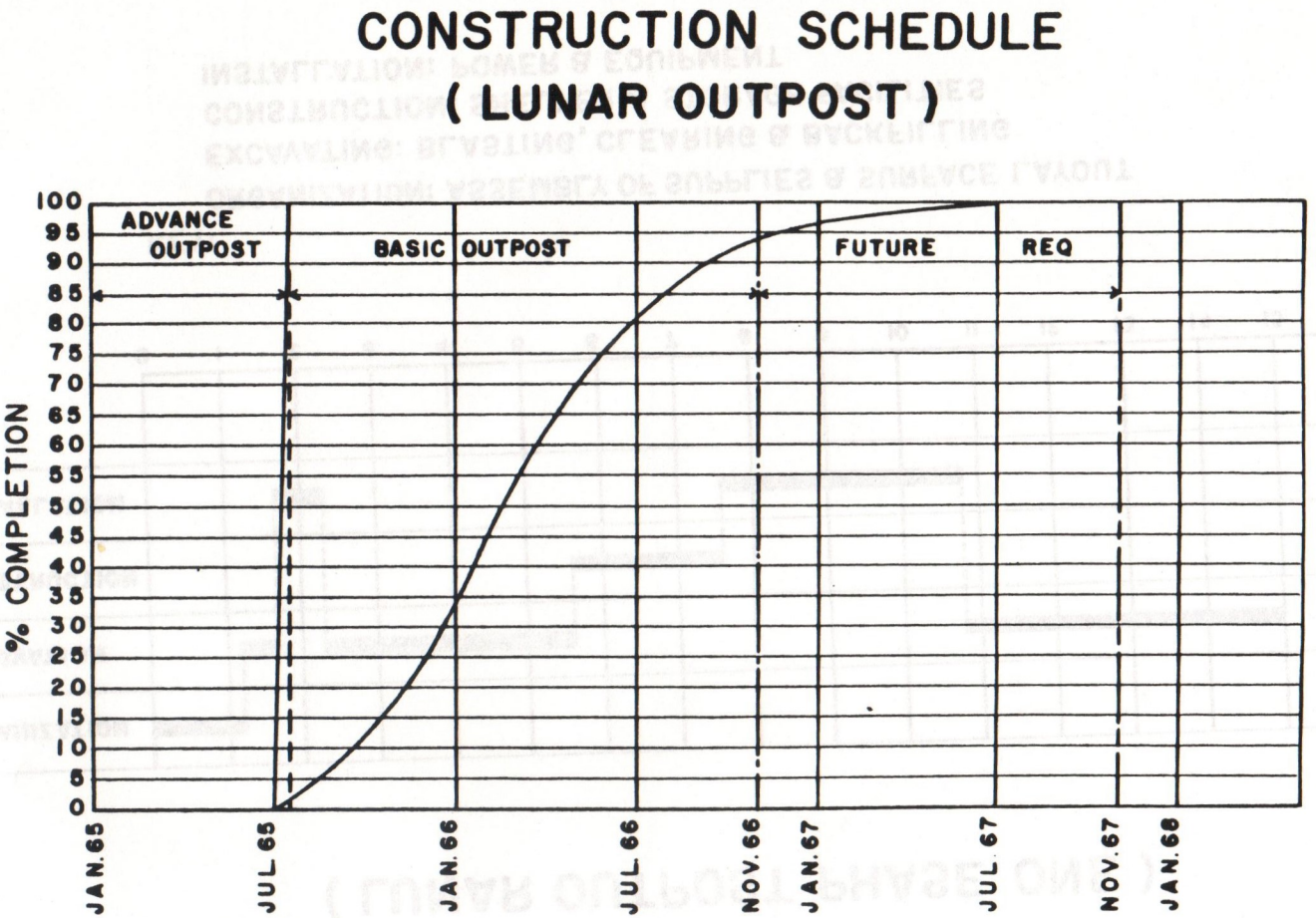


Fig. II-11. Schedule for Basic 12-Man Outpost

CONFIDENTIAL

CONFIDENTIAL
SECRET
UNCLASSIFIED

Another tank will be sawed in half perpendicular to its longitudinal axis. This tank will be placed vertically on the lunar surface with its open end directed upward. Lunar material will be backfilled around the tank to form walkway-type ramps. This tank will be used for storage of solid waste materials collected. The direct solar radiation into the tank will help make wastes such as human feces innocuous.

## C. CONSTRUCTION PROCEDURE AND SCHEDULE

The construction effort for establishment of the outpost must necessarily be initiated and executed with all possible speed as soon as the nine men arrive. Unless the construction is conducted in accordance with a carefully planned program, disastrous delays and incidents could occur that would result in failure of the entire operation and annihilation of all personnel.

The construction is divided into three phases; the first (Fig. II-10) to provide minimum essential requirements within the shortest possible time; the second, (Fig. II-11) to expand the establishment to accommodate additional personnel, provide additional working space and improve conditions beyond those absolutely essential for existance; and the third, to develop the installation to the point that extended explorations can be conducted with minimal support from earth (not covered in detail in this study).

Once the vehicles containing the materials, supplies, and equipment have been located, it will be necessary to unload and assemble the multi-purpose construction vehicle, the explosives, and two nuclear reactor power plants. With these essentials, construction will proceed according to schedules given in Figs. II-10 and II-11.

The individual operations during the construction phase have been studied very carefully. No unusual operation is envisioned which cannot be handled by extending known techniques and skills. It is considered beyond the scope of this feasibility study to describe these operations in detail.

## D. MEDICAL REQUIREMENTS

### 1. Medical Facilities (Installed)

a. Bio-Science Laboratory. This laboratory will be utilized

UNCLASSIFIED
CONFIDENTIAL
SECRET

for biological, radiological and chemical determinations as well as serve to meet clinical and medical needs of outpost personnel. In this regard it will occupy one compartment, with facilities built in to accomplish the tasks outlined above. Equipment will be included for centrifuging, incubation, autoclaving and sterilization. Electrical, water, and exhaust systems must be incorporated, as well as provisions for humidity control and waste disposal. An environment of slightly lower pressure than the rest of the system should be considered in the design.

b. Medical and Surgical Facility. This facility will be used primarily for treatment of disease or injury developed at the outpost.

Specifically, design and construction should encompass the use of one compartment. Lavatory facilities and such features as snap-on shelves and tables are envisioned, as well as maintenance of the environment at the earth's atmospheric pressure. Provisions will be made for water and waste disposal.

c. Medical Equipment. The medical equipment normally required to care for emergencies arising, plus normal day-to-day care, will also be provided. Basic requirements can be listed as follows:

**Operating table**

**Basic instrument set**

**Instrument cabinet**

**X-ray apparatus**

**Operating room lamp**

**Medicine cabinet (secured)**

**Controlled refrigeration facilities, limits between -40°F and +40°F**

**Medical instrument supply and dispensary set**

**Medical supply set; field, supplemental supplies**

**Splint set, telescopic splints**

CONFIDENTIAL
SECRET
UNCLASSIFIED

Surgical instrument supply set, crew

Surgical instrument supply set, individual

Dental instrument and supply set emergency treatment, field

d. Isolation. It would be very desirable to have an area for complete isolation of psychiatric patients and/or communicable disease cases. Specifically, this area will be incorporated in the compartment utilized for the surgical facility and will provide for disposal of excreta, recombency of the individual and for maximum security. In this latter instance, provisions will be made for a door with exterior locking device, and a window which will automatically close if the pressure in the isolation chamber suddenly decreases.

2. Prevention

Detection devices will continually monitor all mechanical systems related to gaseous exchange vital to the closed environment. This system will insure that water is potable, safe, and in sufficient quantity; that food is calorically and nutritionally adequate, permissibly palatable, physiologically tolerable, and without contamination or odors offensive in a closed environment. In addition, all water and food will be continually monitored to assure that harmful radioactive material is not present.

Another preventative measure involves continual surveillance of personnel training disciplines to insure that adequate preventive measures are taken to protect against all environmental hazards; e. g., fuels, propellants, outpost equipment, etc.

Furthermore, continual surveillance of recreational activity and religious needs is required to insure that the personal welfare, mental, physical, and spiritual needs of each member are attended.

Continual monitoring of personal hygiene, sanitation, and waste dispoal is considered a routine necessity.

3. Treatment

Dispensary care and emergency medical and surgical treatment will be conducted in accord with the best acceptable medical dicta as altered or modified by the circumstances.

UNCLASSIFIED
CONFIDENTIAL
SECRET

## E. PERSONAL EQUIPMENT

### 1. Lunar Clothing System

a. Metallic Body Conformation Suit. A body conformation suit having a substantial outer metal surface is considered a necessity for several reasons:

It is uncertain at present that fabrics and elastomers can maintain a sufficient pressure differential without major leakage.

It is desirable that protection be provided against meteoroid impact.

It is necessary to use a highly reflective outer surface to minimize solar heat imputs.

Protection must be provided against highly abrasive characteristics of the lunar surface.

Easy cleansing and sterilization are desirable.

The essential elements (indicated in Fig. II-12), and their characteristics are as follows:

(1) Underwear: cotton undershirt; woolen cushion-sole socks; light impermeable urine and feces containers; cotton undershorts; modified for compatibility with sanitary containers.

(2) Main Suit: outer metal layer; inner anti-bremsstrahlung metallic layer; self-sealant, cushioning, impermeable inner lining; flexible shoulder, elbow, hip, and knee joints; artificial hand operable by controls inside extremities of suit arms; transparent face piece; three-section construction - helmet, cuirass, trousers - the latter two separable into halves; insulative dust shoes.

(3) Thermal, respiratory and communications systems required: Back pack containing compressor, expansion coils, suit air pump, suit compressed air tank, oxygen tank, respiratory pump, $CO_2$ absorber, power source; radiative heat exchanger with connections to AC system; internal air distribution system; oxygen mask with connections to external system and external trip to lift the mask as required; communications antenna integrated into radiative heat exchanger.

UNCLASSIFIED
CONFIDENTIAL









CONFIDENTIAL
UNCLASSIFIED

Fig. II-12. Typical Lunar Suit

Preliminary calculations on the thermal balance of an upright circular cylinder on the lunar surface show that the total range of thermal load will be in the range of -200 to +500 kcal/hour. Thus, the principal requirement is to cool rather than to heat the man.

b. Lightweight Metallic Body Conformation Suit: For the early tentative ventures of man on the lunar surface, involving only short exposure periods, the outer metallic layer may be considerably reduced in thickness and weight, and air-conditioning equipment may be markedly reduced or omitted, or "ground" cooling utilized.

c. Inflated Fabric Suit: An inflated fabric suit similar in basic design to suits currently under development for earth wear was considered. However, currently available materials permit relatively rapid escape of gas to an external high vacuum from an internal pressure of 10 psi, are difficult to air-condition, and provide no protection against meteoroids or ionizing radiation. This general design would have some advantage for short period emergency exposure enroute to the moon or in tentative preliminary excursions on the lunar surface. There are, of course, numerous possible designs for a lunar suit, and considerable effort is required before an optimum can be finalized.

2. Load Carrying System

Slings and hooks on the lunar suit will permit a man to lift a load from the surface and carry it a short distance while steadying it with his artificial hands. Similarly, larger loads can be carried by the concerted effort of several individuals. Loads can be carried on the shoulder and elsewhere, secured by attachment to the hooks, if placed in position by someone other than the man who will transport the load.

3. Sleeping Equipment

Light sleeping bags of conventional design will be furnished initially. (Bunks will be among the built-in furniture in the cabin compartments.) Electric blankets will be available when adequate power supply is assured.

4. Dining Equipment

Until water recovery is established, personal dining equipment will be expendable. All food will be packaged in individual portions and

SECRET
CONFIDENTIAL
UNCLASSIFIED

heated in the package. It can be eaten from the package or from paper trays coated with GRS latex. Tumblers will be made of foamed polystyrene. Knife, fork, and spoon will be made of special polystyrene. When water recovery is established, either metal or plastic non-expendable dining equipment can be utilized.

5. Hand Tools

Where possible, reliance will be placed upon power tools, engineered for use in the lunar environment. Where hand action has to be employed, leverage will be modified to conform to the low gravity state. Special hand tools will be fashioned to maximize the capability of the suited man and overcome the effect of any reduction in flexibility caused by the suit itself. Those tools most frequently required will be carried on the outside of the suit.

NOTE: For the purpose of completeness of this study, it is necessary to determine, in addition to the lunar suit requirements, the transportation requirements for the lunar suit from earth to the moon. Realizing that the weight of the suit could vary from 50 pounds to 500 pounds depending on the design, the following assumptions have been made:

(a) Suit weight - 200 pounds each

(b) Suit life - 6 months

(c) Spares - each man will be provided with two complete spare suits at all times.

(d) A weight of 100 pounds of suit spare parts and components will be provided and maintained for each man.

## F. LIFE ESSENTIALS SUPPLIES

1. Oxygen, Additive, $CO_2$ Removal

Oxygen will be required at the rate of three pounds per man per day. In the early stages, this will be supplied in cylinders delivered from the earth. As soon as practicable, pssibly during the second year, a recycling system will be set up in the shelter, utilizing algae or other green plant system, which will markedly reduce the further requirements for importation of oxygen. Oxygen in tanks will still be required

UNCLASSIFIED
CONFIDENTIAL
SECRET

by the individual in a lunar suit (approximately 1/4 pounds per hour required).

At present there seems to be no very urgent reason to depart from using nitrogen as the diluent for oxygen. Any mechanical advantages that may be considered for helium would be offset by its greater ease of diffusion and hence leakage, and by the high demands upon available supplies.

Removal of $CO_2$ in the respiratory circuit of the lunar suit will be by passage through an absorbent, such as lithium oxide. The weight of lithium oxide used approximately equals the weight of oxygen consumed. $CO_2$ removal from shelter air will be accomplished in the same way during the early phases. When sufficient power for refrigeration is available, condensation will be used or a biological system may be developed for $CO_2$ removal.

2. Water

At least three quarts of potable water per man per day will be provided. Most of the water output in excess of that taken in by food and drink will appear in the atmosphere. This water will be condensed, collected, and used for washing, thus removing the need for an additional quantity. Water can also be recovered from urine and from washing wastes by distillation. If recovered water is rendered potable, need for the three quarts per man per day will be reduced or eliminated.

3. Food

Four pounds of food per man per day is planned for the outpost ration. All food will be sent precooked and packaged in individual portions. It may be preserved by heat ("canning"), dehydration, or irradiation, and, when freezer storage facilities are available, by freezing. Foods to be consumed hot will be heated by immersion of the package in boiling water. As the water inventory builds up, dehydrated foods can be favored to lighten the resupply load. When facilities permit grilling or broiling, uncooked meat will be irradiated, dehydrated, and/or frozen. Men outside the shelter will be provided with paste foods in collapsible containers or with shaped solid foods, either of which can be valved or locked into the helmet without loss of internal pressure. It has been demonstrated that algae can be processed into acceptable and nutritious food; further development effort in this area is to be expected.

SECRET
CONFIDENTIAL
UNCLASSIFIED

Previous experience has demonstrated the morale values of fresh salads. Vegetables for salad may be provided by hydroponic culture, using wastes as nutrients, at least in part, and converting $CO_2$ into $O_2$ in the process, as with algae. Ultimately, plant wastes and algae can be used to feed poultry, which thrive in confinement and are relatively efficient energy converters, producing fresh eggs and meat. Meanwhile, attention will be given to the use of fish and other aquatic animals, such as Daphnia and mollusks, which normally feed on algae.

4. Sanitary Supplies

An initial inventory of 10 pounds of sanitary supplies will be needed (electric shavers, hair clippers, nail clippers, brooms, brushes, towels, plastic pail, etc.). A portion of this inventory will require periodic replacement (detergents, disinfectants, deodorants, toilet paper, etc.). This replacement rate is estimated at 20 pounds per month, increasing to 40 pounds per month when the population increases from 2 to 12 men. Most of this increased allowance is for a disinfecting detergent to be used on the lunar suit on each passage into or out of the shelter.

5. Medical Supply

Routine medical and surgical supplies will amount to five pounds per month. It is likely that occasional special supplies will be in excess of this quantity. Average experience figures are a poor guide for a population of only a few individuals.

## G. SURFACE TRANSPORTATION

The extreme lunar environment which so critically affects lunar suit design likewise presents many problems in surface vehicle design. The solution to these problems will require considerable research; maximum utilization of resources of originality, skill and experience; and extensive testing in unique lunar environment simulation facilities. The multi-purpose construction vehicle previously described has many possible secondary functions in addition to its primary function of installing and maintaining the various outpost components. However, this vehicle will be almost continuously occupied at the outpost site for the first several months; and these secondary functions such as cargo recovery, exploration, and surveillance can best be performed by an additional vehicle specifically designed for the purpose.

UNCLASSIFIED
CONFIDENTIAL
SECRET

1. Lunar Vehicle Missions, Weight Limits, Mobility and Environmental Factors

Analysis of outpost transport requirements indicates a variety of possible vehicle missions including transport of the initial two-man party, cargo recovery, surveillance, search and rescue, ambulance service and light utility and administrative transport. Approximately two thousand pounds has been set as the limiting weight of vehicle, accessories, and appurtenances such as an integral two man closed environment cab. Analysis of reasonably well founded theory on characteristics of the lunar surface indicates that no insurmountable mobility problems exist that would exceed the capabilities of wheeled equipment. Auxiliary track kits can be provided to cope with possible deep loose dust areas. Lunar gravity enhances mobility in that vehicle track and wheel contact pressures will be mere ounces per square inch, and both vehicle power requirements and power storage requirements are greatly reduced as compared to earth-based requirements. It is estimated that rather than requiring 20-25 hp per ton as do earth-bound off-road vehicles, a 2,000-pound lunar vehicle would need only five to six installed horsepower, and could probably operate over a 50-150 mile range with about 10 hp hours power storage capacity.

The best approach to meet these power requirements appears to be use of rechargeable batteries supplying power to an electric motor drive system.

2. Characteristics of Lunar Transport Vehicle

As presently visualized, the lunar transport vehicle will be a low silhouette, skeletionized vehicle of light weight metal construction. It will be sectionalized and will have a chassis of approximately 6 x 6 feet exposed, and enclosed forward seats and controls, and rearward load deck. The portable two-man cab or space-lock will incorporate all essential life support elements and communications equipment. Initially, the vehicle will consist primarily of a single axle assembly, tiller wheel, necessary connecting linkage and seating arrangement for two men. Subsequently, capabilities will be increased through the addition of a second and third axle assembly, connections, control links and cargo compartments. Each axle assembly will include electric motors, batteries, control system, and heat rejection equipment. Considering a vehicle of approximately 2,000 pounds overall weight (3 axle), load carrying ability is estimated to be between 1,000 and 6,000 pounds depending on lunar surface conditions and cargo density.

CONFIDENTIAL
SECRET
UNCLASSIFIED

It is estimated that with a total battery weight of approximately 500 pounds and six each one-horsepower drive motors, the vehicle can operate continuously for a period of 10 hours, and to a range of approximately 50 miles.

Figure II-13 illustrates a typical conceptual design of a lunar surface transport vehicle.

## H. ENVIRONMENTAL RESEARCH AND SUPPORT ACTIVITIES

Fortunately, the means for obtaining urgently needed lunar environmental data are within near future capabilities, and programs for lunar explorations are currently receiving considerable attention. A relatively few unmanned lunar landings will be essential; these will be multi-purpose in nature. These vehicles will be equipped to collect samples for examination on earth for telemetering certain information back to earth, and for depositing on the lunar surface such things as a mammal in lunar suit, homing beacons, scanning cameras, etc. All of this, along with information obtained by lunar and earth satellites, will suffice to fill the gaps and give completeness to plans for manned lunar exploration and for the establishment of a lunar outpost. Man will arrive on the lunar surface with a considerable amount of knowledge concerning that body; however, there will still be a considerable amount of knowledge not yet unveiled. For this reason on-site study, data collection, observation, and verification of results obtained by probes will be essential.

### 1. Essential Data Requirements

#### a. Probes

##### (1) Physical

Radiation: Exposures occuring from natural and man-made sources to be considered include radiations from cosmic rays, the Van Allen belts, the sun, natural background on the moon, communications equipment, and nuclear weapons and power sources. The character and intensity of cosmic radiation and its general biological effect in the earth's atmosphere has been studied, but in space, knowledge in this area is virtually nonexistent. The Van Allen belts are vaguely outlined. The size, shape, and intensity and the type of radiation has not been established in terms of biological interest. Radiation from the sun is generally understood but the extent of soft

UNCLASSIFIED
CONFIDENTIAL

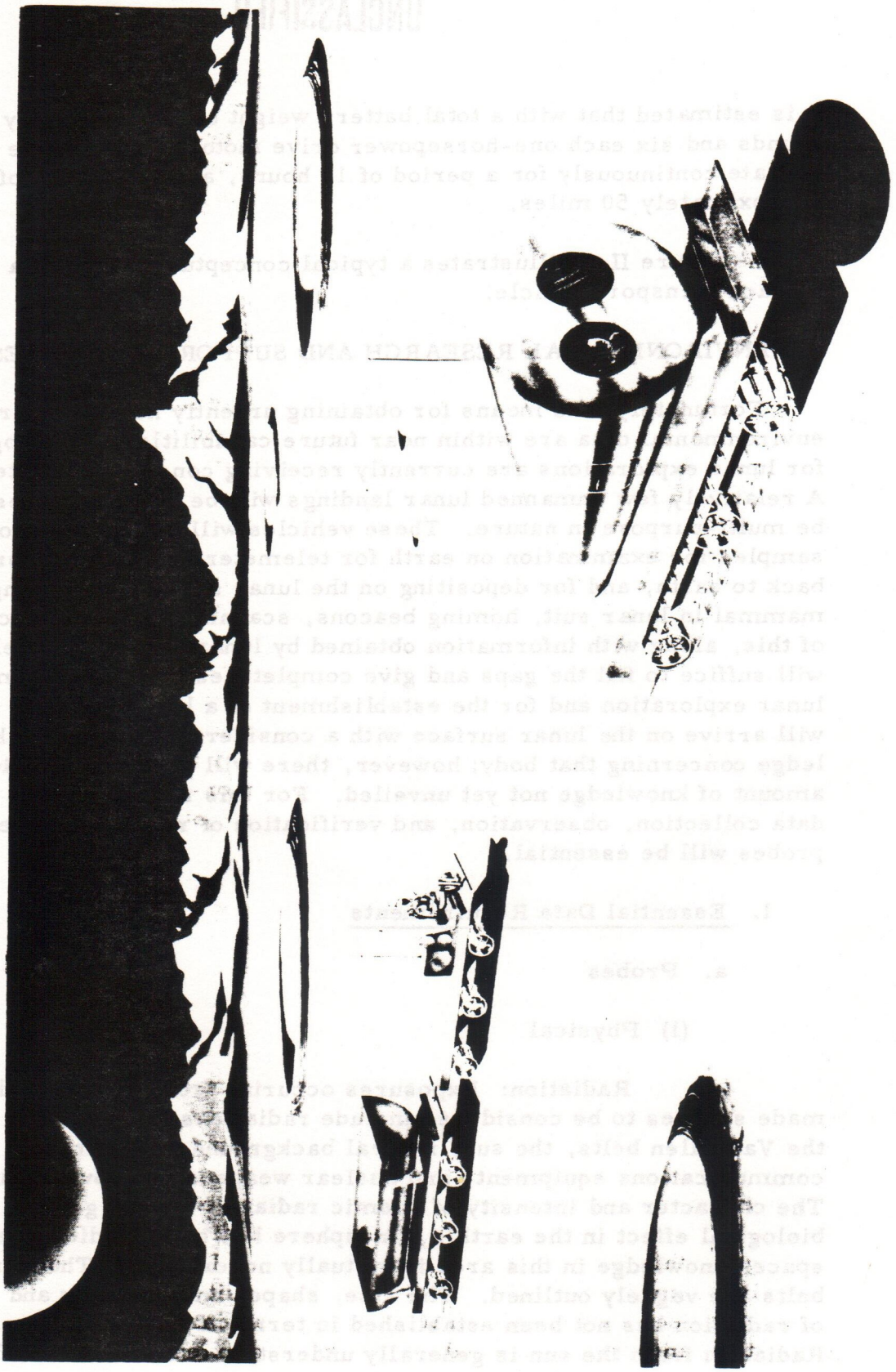

Fig. II-13. Typical Lunar Surface Transport Vehicle

rays is not known. Nothing is known of the naturally occuring radiation around and on the moon. An evaluation of the spatial distribution, type, energy spectrum, intensity and time of exposure, when combined with biomedical effects determined by exposing mammals, will enable the total radiation problem to be estimated within tolerable accuracy. In early probes the simplest possible instrumentation, commensurate with telemetering data, will be used to measure gamma, beta, and neutrons, (principally but not limited to cosmic origin) and the existence of local source radiation. In later probes, more sophisticated instrumentation will be employed. For example, miniaturized band spectrometers will be used to measure the gamma energy spectrum, to estimate the beta energy spectrum, and to make more exact and detailed measurements of the beta and gamma doses. Also in later probes, more advanced instrumentation will be employed to more closely measure the neutron dose and fast neutron spectrum. Data obtained from the early probes concerning gamma, beta, and neutron doses will be used as a basis for the experimental design of studies on other charged particles. These measurements will include protons, positrons, mesons and other radiations principally of cosmic origin.

Meteoroid Impact: Measuring the extent of erosion (using a strip gauge mounted on the vehicle) is necessary as well as impact on the vehicle measured by internal detectors recording hits. An electrically insulated laminated strip would be mounted on the vehicle to study penetration.

Temperature: Probes will be used to obtain a broad-band indication of the thermal radiation. Temperature must be verified and this should be obtained for: (1) the surface in full sunlight; in the shaded areas around which full sunlight prevails and during lunar night; (2) vehicle component temperatures; (3) internal vehicle temperatures; and (4) lunar sub-surface temperatures with the determination of the thermal gradient of lunar sub-surface to the surface under conditions of sunlight and darkness. A variety of solid state devices are available for detection, and these will be used with selective absorbers and band-pass filters to obtain spectral measurements. The evaluation will be made in relation to the environmental temperature problem and the extent to which various surfaces are heated. The range from the vacuum ultra-violet to the far infrared will be covered at least to the extent that any hazards are involved.

Magnetic Field: A determination will be made as to the existence or non-existence of a magnetic field and its magnitude, if existent.

Surface at Landing Site: The hardness and composition of the surface at the lunar landing site will be determined.

Surface Forms: A study of surface forms found in the lunar landing area by high resolution TV scanning and by sampling of surface and immediate sub-surface material will be performed. The roughness of the landing site will also be determined at this time.

Surface Conductivity: The conductivity, both thermal and electrical, of the lunar surface material and sub-surface material will be established.

Magnetic Materials: A determination of the occurrence and concentration of local magnetic material will be made.

Atmospheric Pressure: By the use of a modified omegatron, an attempt will be made to measure the atmospheric pressure.

Atmosphere: Depending upon the outcome of atmospheric pressure measurements, an analysis of the lunar atmosphere will be made.

Beacon Planting and Location Techniques (from earth): Accurate determination of radio frequency beacon locations will be made to permit soft landings in a predetermined area.

Ionized Layers at Lunar Surface: A determination will be made concerning the existence or non-existence of ionized layers near the lunar surface as an aid in determining operating radio frequencies of lunar communication systems.

Radio Frequency Propagation: A determination of the propagation factors versus frequency and distances will be made.

Photography of the Lunar Surface: An earth satellite will be required for lunar photography. It will be equipped with a telescope having an approximate one meter aperture and 100-200 meter effective focal length with a vidicon camera and transmitter. The camera will be kept focused and directed toward the moon. The minimum orbital altitude should be 600 km; 1,200 km is desirable. In addition, several lunar satellites each containing a camera at altitudes below 500 km will be used for providing more surface detail of the landing sites under consideration.

SECRET
CONFIDENTIAL
UNCLASSIFIED

(2) Biological

Experimental Animals: Animals will prove very useful to verify experimental results and insure that no unsuspected problems are overlooked. It is conceived that the biological and physical experiments can be combined to limit the actual number of probes required to a minimum. Measurements and biological effects evaluations of nuclear weapons on animals should be considered.

Existence or Non-existence of Life: The evidence of life might be implied by finding certain combinations of carbon and nitrogen. Indication of the existence of these two elements in proper combination, lacking an actual sample, could be found by means of a spectrophotometer. There is also the possiblity of rudimentary life having for example silicon rather than carbon as the basic element.

b. On-Site Studies

Although information obtained from unmanned lunar probes will largely determine the final design of equipment for use by personnel, most of the data initially obtained from probes will be extended in precision and range by measurements conducted by personnel of the outpost.

(1) Physical

Temperature: Diurnal, seasonal, and latitudinal distribution of lunar surface temperature will be verified and measured more precisely.

Luminosity: The intensity of light, both direct sunlight and earth light will be determined.

Ionizing Radiation: The beta, gamma, neutron, and measurements of other radiations measurements will be verified.

Meteoriods: A grid-type system can be used to study the incidence, size, penetration, and erosion effects at and near the lunar outpost.

Selenography: Initially, a limited study will be conducted to obtain pertinent information concerning the physical features of the moon as it affects the outpost. The chemical composition, electrical



UNCLASSIFIED
CONFIDENTIAL
SECRET

and thermal properties, density, porosity, rigidity and particle sizes of the surface materials as functions of depth and locale will be investigated. The variation of some properties with time (perhaps cylic with lunar month) will be required in order to obtain these values as a function of temperature. During the investigations of the lunar surface and sub-surface, emphasis will be placed on possible future utilization of sub-surface natural resources.

Gravity: The acceleration of gravity on the moon will be verified. This can be accomplished by a gravity-meter survey near the outpost. Measurements will be extended from the outpost site as opportunity permits.

Magnetic Field: The existence or non-existence of a lunar magnetic field will be verified and investigated thoroughly.

Earth Observations: Primarily for purpose of intelligence, telescope having a 90 cm aperture or larger, with image intensifier for infrared observation of the earth and sky photography, can be used.

Lunar Survey: A limited lunar survey will be conducted using an established base line. Photogrammetric mapping techniques will be employed, possibly a lunar satellite, with stable orbit, and continuous pictorial transmission will be employed.

Pressure and Temperature: Data obtained from the earlier probes will be verified concerning pressure and temperature and composition of any existing atmosphere as functions of height and time.

(2) Biological

Psysiological Reactions: Continuous observations will be made concerning man's working capacity, psychomotor performance, cardio-vascular function, appetite, sleep patterns, etc. (Confirmation of and extension of chemical, radiological, and biological probe findings will be carried on with animal and other life forms.) (Experiments will be conducted after the outpost has been established utilizing solar energy for food production. Hydroponic, algae and fungal, mollusk, chemical analog of photosynethesis.)

SECRET
CONFIDENTIAL
UNCLASSIFIED

2. Minimum Experimental Activities

The first two men to arrive on the moon will obviously have limited investigative capability. There will be an urgency to test as many prior assumptions as possible. An example of what they may accomplish follows:

a. Sensory Observations

(1) Visual

(2) Topography - verification of payload locations.

(3) Terrain analysis and "atmospheric" analysis.

(4) Determination of light conditions.

(5) Tactile - Terrain consistency. Temperature gradient.

(6) Equilibrium, balance and gravity effects.

b. Equipment and Instruments

(1) Radiation instruments, scintillation counter, film badge, geiger counter.

(2) Telescope

(3) Chemical kit.

(4) Biological kit.

(5) Physical science kit, magnetic dip needle, gyro compass.

(6) Meteorite counter.

c. Biologic Observations

Continuing observations will be made of physical and psychical behavior of all personnel. Any change in behavior will be studied as to its relation to specific influences of the closed system environment and the lunar environment. Clinical observations will be sent back to terrestial medical installations for interpretation. Within



UNCLASSIFIED
CONFIDENTIAL

smaller limits, actual laboratory experiments may be carried out in the outpost Bio-Science Laboratory. The effect of reduced gravity upon biological mechanisms will be closely observed. Radiation effects, if existent, will be studied with the use of animal, plant, bacterial, yeast and viral forms of life.

SECRET
CONFIDENTIAL
UNCLASSIFIED

# (S) CHAPTER III: SPACE TRANSPORTATION SYSTEM

The capabilities of space transportation dictate to a large extent the overall program schedule for the lunar outpost effort. The following paragraphs outline those areas of the program dealing with the space vehicles from lift-off to landing on the lunar surface and, when appropriate, until return to earth. Presented are detailed discussions of flight mechanics, of the orbital carrier and space vehicles, of transportation system integration, and, finally, an examination of payload preparation and schedules.

## A. FLIGHT MECHANICS

### 1. Trajectories in Earth-Moon Space

The trajectory followed by a vehicle traveling between the earth and the moon or vice versa can be divided into three phases: launch or injection into a free-flight orbit, the free-flight trajectory, and the braking trajectory for landing or recovery of the entry body. The first phase of this trajectory involves taking off from the earth or the moon and providing the vehicle with the required injection velocity. The third phase involves deceleration or braking the speed of the vehicle by retro-rockets or aerodynamic forces. These phases are discussed in more detail in a later portion of this chapter.

In the second phase of the trajectory the vehicle follows the coasting or free-flight path. Usually the elements of the free-flight trajectory can be computed as a perturbed two-body path which approximates a conic section. Whether this conic section is an ellipse, a parabola, or a hyperbola depends on the energy level or the injection velocity. The trajectory will follow an elliptical path for low energies or injection velocities less than escape velocity, a parabolic path for the escape condition, and a hyperbolic path for high energies or velocities exceeding escape velocity.

The low-energy or elliptical trajectories give the highest payload capabilities because less velocity is required at injection. However, they are sensitive to small deviations in the injection or initial conditions and lead to long transfer or coasting times. The high-energy transits are not as sensitive to small deviations in the injection condition and flight time is much reduced, but they result in payload penalties and higher entry velocities which require greater braking energy.

UNCLASSIFIED
CONFIDENTIAL
SECRET

A good compromise between the conflicting conditions appears to be a parabolic path with approximate escape conditions at injection. To illustrate the effect of various injection velocities on the time in orbit and the unbraked impact velocity, a number of trajectories are considered: the velocity, flight time, unbraked velocity, and the braking required for a low-altitude circular lunar satellite are given in Table II-4. The injection angle for the trajectories is approximately 82° for all of the conditions considered. Trajectory 4 (Table II-4) which is the case of the parabola, was selected for this study. A profile of a typical parabolic trajectory is plotted in Fig. II-14.

For the minimum lunar flight requirements, where the objective is merely to impact upon the moon's surface, injection guidance or accurate control of the initial conditions is adequate. For landing at a predesignated location on the moon, including braking during the terminal phase, a more elaborate guidance system is required including midcourse and terminal capabilities. The maneuverability during the terminal braking phase is limited to approximately 20 km; therefore, midcourse guidance must be utilized to give a landing accuracy within 20 km.

The problem of timing for lunar flights is of great importance. The central angle from the launch site to the point of lunar arrival is approximately 225°, which is the sum of 60° for the powered-flight trajectory plus 165° for the free-flight or coasting trajectory. The declination of the moon's orbit is approximately ±18°. To launch from the Atlantic Missile Range to the moon requires an azimuth between 90° and 180°. For azimuths between 90° and 110°, launchings are still possible for approximately 15 days out of the 28-day period. The lunar declination would be negative upon arrival. At both the time of launch from the earth and the time of arrival at the moon, the moon will be far below the horizon of the launch site.

Another type of lunar trajectory which should be mentioned is the circumlunar trajectory in which the lunar vehicle makes a return flight to the earth. This class of trajectory poses some guidance accuracy problems, especially for proper re-entry conditions for the return trip to earth.

2. Ascent into 96-Minute Orbit

Trajectory data were calculated for ascent to a 96-minute orbit and direct escape from earth. The vehicle was assumed to be

CONFIDENTIAL
UNCLASSIFIED

Table II-4
FLIGHT TIME AND VELOCITY VALUES FOR VARIOUS EARTH - MOON TRAJECTORIES

| Trajectory | Injection Velocity at Altitude of 330 km (m/sec) | Flight Time | Lunar Impact Velocity Unbraked (m/sec) | Braking Required for Lunar Satellite (m/sec) |
|---|---|---|---|---|
| Absolute minimum injection velocity (perhaps inpossible) | 10,770 | 10 years | 2,325 | 647 |
| Minimum velocity for direct elliptical transfer | 10,810 | 5 days | 2,500 | 822 |
| Two and one-half day elliptical transfer trajectory | 10,860 | 2½ days | 2,703 | 1,027 |
| Parabolic transfer trajectory | 10,906 | 51 hours | 2,886 | 1,208 |
| Usable hyperbolic transfer trajectory | 10,991 | 41 hours | 3,179 | 1,501 |

launched vertically; and after approximately ten seconds of vertical flight, a small angle of attack was applied to tilt the vehicle in the desired direction. After about 40 seconds of flight time, the angle of attack was removed and the vehicle followed a zero-lift trajectory until first-stage burnout. During the flight of the upper stages, various values of angle of attack were applied to give the desired conditions for injection into an orbit or to escape from the earth.

For injection into the 96-minute circular orbit, orbital altitude of 568 km (306.6 nautical miles or 353 statute miles), injection was made via a Hohmann transfer ellipse. The first injection point, where the vehicle enters the elliptical transfer orbit, occurs at an angle of 90° with the local vertical and is the perigee of the transfer orbit. A velocity of 7929 m/sec was required for an assumed injection altitude of 100 statute miles (161 km). The apogee of the ellipse occurs at the required orbital altitude of 568 km for the 96-minute orbit. Re-ignition of the final stage is necessary to provide a velocity kick of 116 m/sec at the apogee. Thus, the required circular velocity of 7580 m/sec is attained at the second injection point where the orbital conditions are attained for the 96-minute orbit.

It was assumed that the three-stage version of SATURN II would be used for the mission of the 96-minute orbit. The trajectory data from lift-off to the first injection point is listed in Table II-5. The velocity, altitude, range on the earth's surface, acceleration,

UNCLASSIFIED
CONFIDENTIAL
SECRET

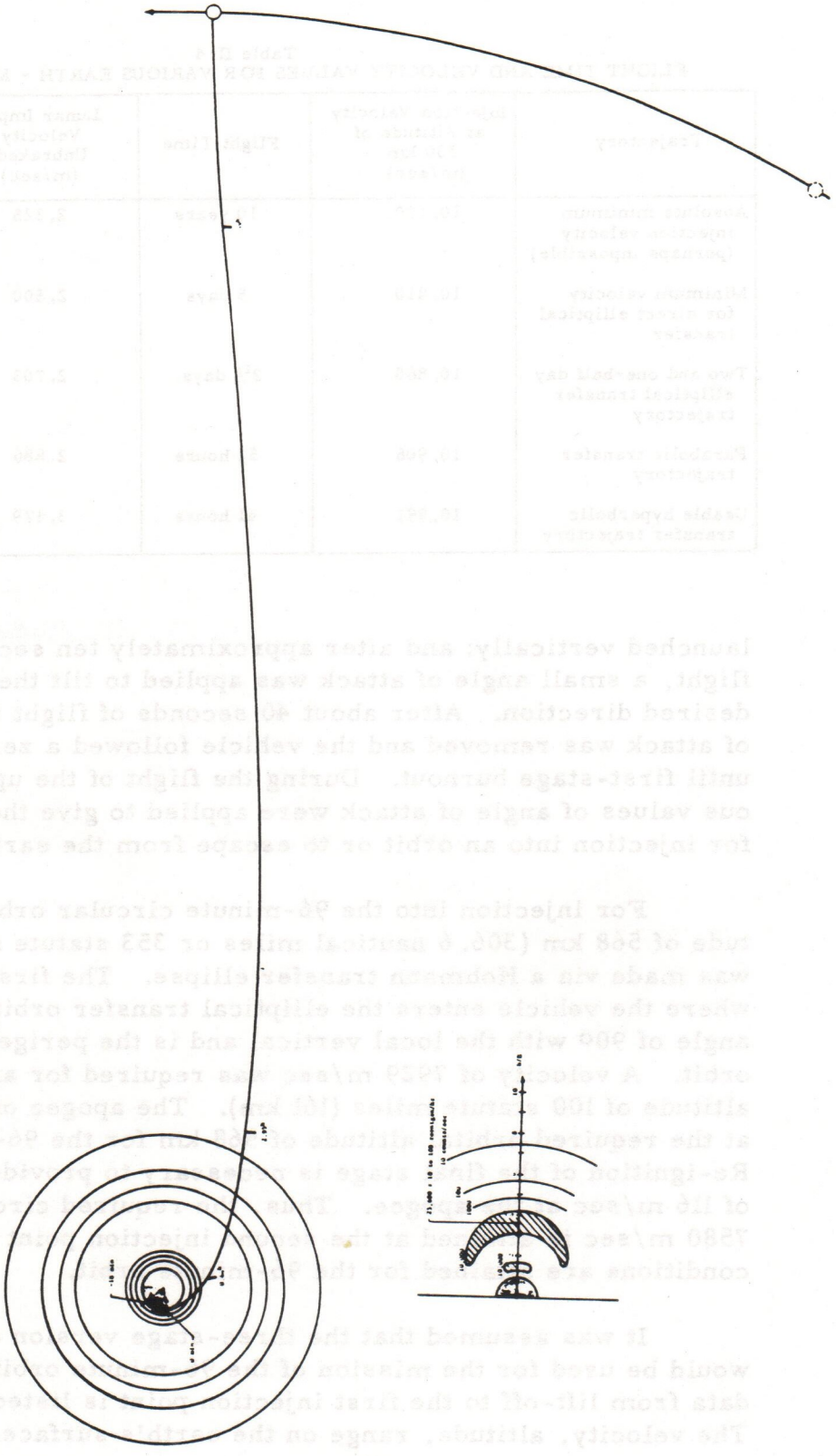

Fig. II-14. Typical Earth-Moon Parabolic Trajectory

CONFIDENTIAL
SECRET
UNCLASSIFIED

TABLE II-5

TRAJECTORY DATA FOR 96-MINUTE ORBIT
SATURN II (3 Stage)

| Time sec | Velocity m/sec | Altitude km | Range km | Acceleration $m/sec^2$ | Flight Path Angle deg | Dynamic Pressure $kg/m^2$ |
|---|---|---|---|---|---|---|
| | | | FIRST STAGE | | | |
| 0 | 0 | 0 | 0 | 2.9 | 0 | 0 |
| 12 | 40 | .2 | 0 | 3.8 | .2 | 98 |
| 24 | 91 | 1.0 | 0 | 4.8 | 2.3 | 469 |
| 36 | 155 | 2.5 | 0.1 | 6.0 | 6.5 | 1180 |
| 48 | 236 | 4.8 | 0.5 | 7.5 | 12.0 | 2145 |
| 60 | 336 | 8.0 | 1.4 | 9.1 | 18.1 | 3005 |
| 64 | 373 | 9.4 | 1.9 | 9.8 | 20.2 | 3169 |
| 68 | 414 | 10.8 | 2.4 | 10.7 | 22.2 | 3252 |
| 72 | 459 | 12.4 | 3.1 | 11.7 | 24.3 | 3117 |
| 76 | 508 | 14.2 | 3.9 | 12.7 | 26.2 | 2900 |
| 88 | 681 | 20.4 | 7.4 | 16.2 | 31.7 | 1976 |
| 103.54 | 970 | 30.8 | 14.7 | 21.2 | 37.7 | 754 |
| 103.54 | 1308* | 30.8 | 14.7 | - | 54.2 | - |
| | | | SECOND STAGE | | | |
| 103.54 | 1308 | 30.8 | 14.7 | 6.4 | 54.2 | 754 |
| 108.04 | 1338 | 34.0 | 19.5 | 6.8 | 55.7 | 400 |
| 120.04 | 1427 | 42.9 | 33.5 | 8.0 | 59.6 | 292 |
| 140.04 | 1606 | 56.8 | 60.1 | 9.8 | 65.5 | 67 |
| 160.04 | 1820 | 69.6 | 91.6 | 11.6 | 70.5 | 17 |
| 180.04 | 2069 | 81.1 | 128.2 | 13.3 | 74.6 | 4 |
| 200.04 | 2354 | 91.6 | 170.3 | 15.1 | 77.8 | 1 |
| 220.04 | 2674 | 101.1 | 219.1 | 17.0 | 80.2 | 0 |
| 240.04 | 3035 | 110.0 | 274.5 | 19.1 | 81.9 | 0 |
| 260.04 | 3442 | 118.4 | 337.5 | 21.6 | 83.1 | 0 |
| 280.04 | 3904 | 126.6 | 409.0 | 24.7 | 83.9 | 0 |
| 298.84 | 4400 | 134.6 | 485.0 | 28.2 | 84.2 | 0 |
| | | | THIRD STAGE | | | |
| 298.84 | 4400 | 134.6 | 485.0 | 7.7 | 84.2 | 0 |
| 320.04 | 4569 | 143.2 | 577.7 | 8.3 | 85.4 | 0 |
| 340.04 | 4741 | 149.7 | 668.4 | 8.9 | 86.5 | 0 |
| 360.04 | 4925 | 154.8 | 762.7 | 9.5 | 87.4 | 0 |
| 400.04 | 5331 | 161.4 | 962.3 | 10.8 | 88.8 | 0 |
| 440.04 | 5793 | 163.9 | 1179.2 | 12.3 | 89.8 | 0 |
| 454.80** | 5979 | 164.0 | 1263.9 | - | 90.0 | 0 |
| 480.04 | 6320 | 163.7 | 1415.2 | 14.1 | 90.2 | 0 |
| 500.04 | 6612 | 163.2 | 1541.2 | 15.2 | 90.2 | 0 |
| 520.04 | 6928 | 162.8 | 1673.2 | 16.5 | 90.1 | 0 |
| 540.04 | 7273 | 162.7 | 1811.6 | 18.1 | 90.0 | 0 |
| 551.11*** | 7479 | 162.7 | 1891.7 | - | 90.0 | 0 |
| 569.95 | 7854 | 162.7 | 2032.0 | 20.9 | 90.0 | 0 |

* Corrected for Earth's Rotation
** Maximum Summit
*** Minimum Summit or Injection



UNCLASSIFIED
CONFIDENTIAL
SECRET

flight-path angle, and dynamic pressure are given as a function of flight time. Correction for the earth's rotation was made at the end of the first powered stage to convert to an inertial system of reference. A plot of the altitude as a function of range is given in Fig. II-15. Two summit points were reached in this ascent trajectory. A maximum summit occurred at an altitude of approximately 164 km and a velocity of less than 6000 m/sec. A minimum summit occurred at the injection altitude of 161 km (100 statute miles) where the required velocity of 7929 m/sec was attained. This trajectory shape is considered typical for ascent into a satellite orbit.

3. Escape from the Earth's Surface and 96-Minute Orbit

a. Escape from Earth's Surface

The trajectory for escape from the earth's surface is similar to that for injection into an elliptical transfer orbit, except that the flight path angle does not have to be 90° with the vertical. The injection angle will usually be in the vicinity of 80° with the vertical. Generally, two summit points will be reached in the ascent trajectory, and the flatter the trajectory shape the more favorable is the payload capability. Trajectory data for a typical direct escape mission are given in Table II-6. A minimum point occurs at approximately 120 km altitude, and preliminary calculations show that no aerodynamic heating problems are anticipated at this altitude. Final injection occurs at an altitude of 330 km with a flight path angle of 80° and at an escape velocity of 10,984 m/sec. A profile of this trajectory is plotted in Fig. II-16 where altitude is plotted versus range on the earth's surface.

b. Escape from 96-Minute Orbit

Another possibility for achieving injection into an escape orbit is to first enter a 96-minute orbit and then to escape from this orbit. This is a situation where limited amounts of payload in the form of cargo and personnel can be injected into a 96-minute orbit, and a space vehicle assembled or fueled in the orbit for flight to the moon or some other destination in outer space. Among other problems, rendezvous with the space station presents some navigational problems not ordinarily encountered. To accomplish the orbital rendezvous (contact with the space terminal), injection into the elliptical transfer orbit must be accurate and have the proper timing. Detection and correction of errors must be accomplished for proper matching of the space terminal orbit. Final vernier-type maneuvers will be required to obtain contact with the space terminal.

SECRET
CONFIDENTIAL
UNCLASSIFIED

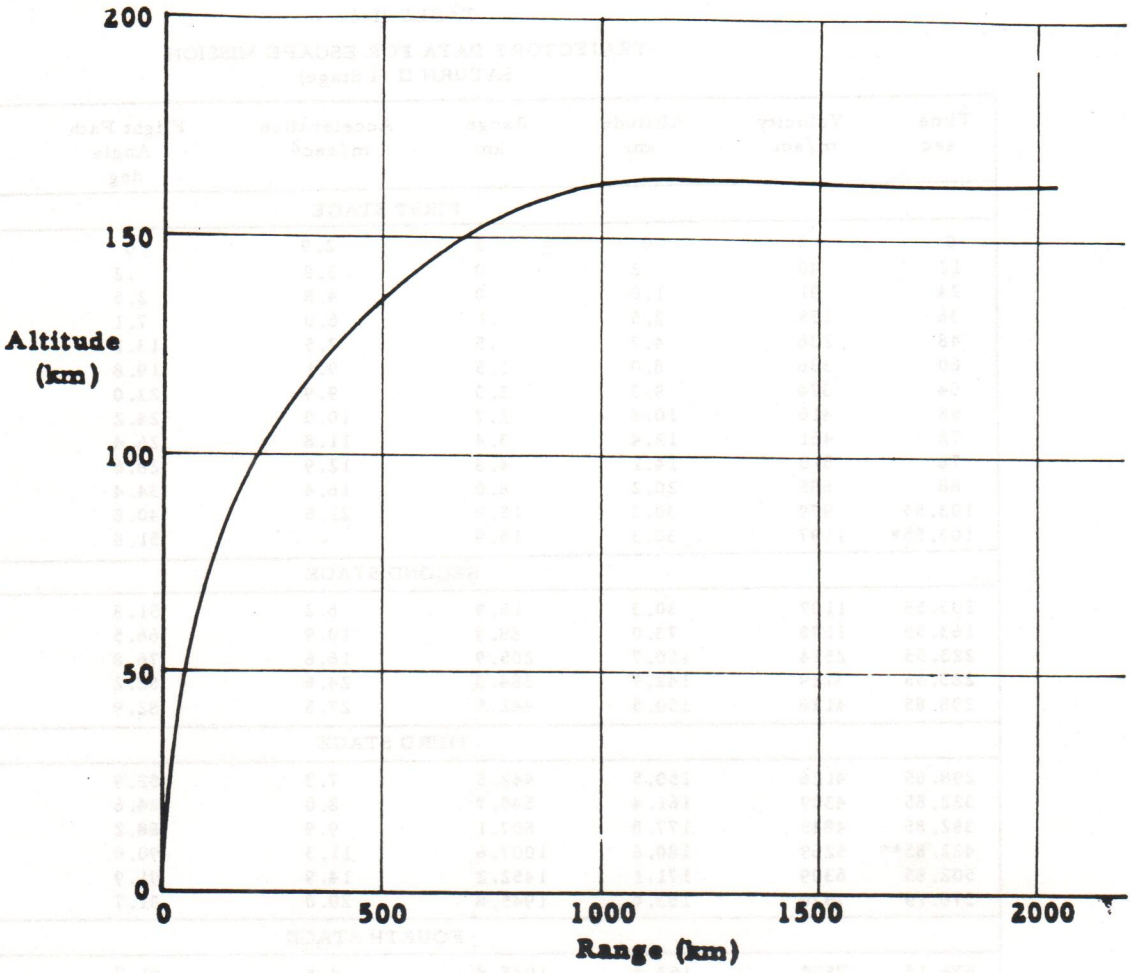


Fig. II-15. Ascent Trajectory for Transfer into 96-Minute Orbit

At completion of the fueling and loading of the space vehicle, it will be launched from the 96-minute orbit at the proper time to make connections with its next destination such as a lunar outpost site. The trajectory data for escape from a 96-minute orbit are listed in Table II-7, and a profile depiction of these data is given in Fig. II-17. Escape conditions are reached at the injection altitude of 1340 km, a flight path angle of 74°, and the escape velocity of 10,182 m/sec. This final escape trajectory was calculated with the assumption of zero lift which is considered very near optimum for this type flight path. It is a well known fact that for optimum escape a programmed angle of attack should be used so that at cutoff there is zero angle of attack, and during burning there is a very small inward thrust component.



UNCLASSIFIED
CONFIDENTIAL

TABLE II-6

TRAJECTORY DATA FOR ESCAPE MISSION
SATURN II (4 Stage)

| Time sec | Velocity m/sec | Altitude km | Range km | Acceleration $m/sec^2$ | Flight Path Angle deg | Dynamic Pressure $kg/m^2$ |
|---|---|---|---|---|---|---|
| | | | FIRST STAGE | | | |
| 0 | 0 | 0 | 0 | 2.9 | 0 | 0 |
| 12 | 40 | .2 | 0 | 3.8 | .2 | 97 |
| 24 | 91 | 1.0 | 0 | 4.8 | 2.5 | 467 |
| 36 | 155 | 2.5 | .1 | 6.0 | 7.1 | 1178 |
| 48 | 236 | 4.7 | .5 | 7.5 | 13.1 | 2148 |
| 60 | 336 | 8.0 | 1.5 | 9.1 | 19.8 | 3027 |
| 64 | 374 | 9.3 | 2.0 | 9.9 | 22.0 | 3201 |
| 68 | 416 | 10.8 | 2.7 | 10.8 | 24.2 | 3297 |
| 72 | 461 | 12.4 | 3.4 | 11.8 | 26.4 | 3181 |
| 76 | 510 | 14.1 | 4.3 | 12.9 | 28.6 | 2976 |
| 88 | 685 | 20.2 | 8.0 | 16.4 | 34.4 | 2076 |
| 103.55 | 979 | 30.3 | 15.9 | 21.5 | 40.8 | 836 |
| 103.55* | 1197 | 30.3 | 15.9 | - | 51.8 | - |
| | | | SECOND STAGE | | | |
| 103.55 | 1197 | 30.3 | 15.9 | 6.2 | 51.8 | 836 |
| 163.55 | 1698 | 73.0 | 88.9 | 10.9 | 66.5 | 9.7 |
| 223.55 | 2514 | 110.7 | 205.9 | 16.6 | 76.8 | 0 |
| 283.55 | 3729 | 142.7 | 384.3 | 24.6 | 82.2 | 0 |
| 298.85 | 4126 | 150.5 | 442.5 | 27.5 | 82.9 | 0 |
| | | | THIRD STAGE | | | |
| 298.85 | 4126 | 150.5 | 442.5 | 7.3 | 82.9 | 0 |
| 322.85 | 4309 | 161.4 | 540.7 | 8.0 | 84.6 | 0 |
| 382.85 | 4845 | 177.8 | 807.1 | 9.9 | 88.2 | 0 |
| 422.85** | 5269 | 180.6 | 1007.6 | 11.3 | 90.0 | 0 |
| 502.85 | 6309 | 171.1 | 1452.2 | 14.9 | 91.9 | 0 |
| 576.15 | 7570 | 153.4 | 1945.8 | 20.0 | 91.7 | 0 |
| | | | FOURTH STAGE | | | |
| 576.15 | 7570 | 153.4 | 1945.8 | 4.8 | 91.7 | 0 |
| 640.15 | 7889 | 140.0 | 2429.1 | 5.1 | 91.6 | 0 |
| 700.15 | 8207 | 127.5 | 2901.9 | 5.5 | 91.1 | 0 |
| 760.15 | 8546 | 120.4 | 3404.7 | 5.8 | 90.5 | 0 |
| 792.15*** | 8735 | 119.3 | 3666.1 | 6.0 | 90.0 | 0 |
| 860.15 | 9160 | 125.5 | 4263.0 | 6.5 | 88.8 | 0 |
| 920.15 | 9562 | 144.8 | 4812.6 | 7.0 | 87.3 | 0 |
| 980.15 | 9997 | 182.0 | 5383.5 | 7.6 | 85.4 | 0 |
| 1040.15 | 10473 | 243.0 | 5974.7 | 8.4 | 83.2 | 0 |
| 1097.79 | 10984 | 329.9 | 6560.5 | 9.4 | 80.6 | 0 |

* Corrected for Earth Rotation
** Maximum Summit
*** Minimum Summit

SECRET
CONFIDENTIAL
UNCLASSIFIED

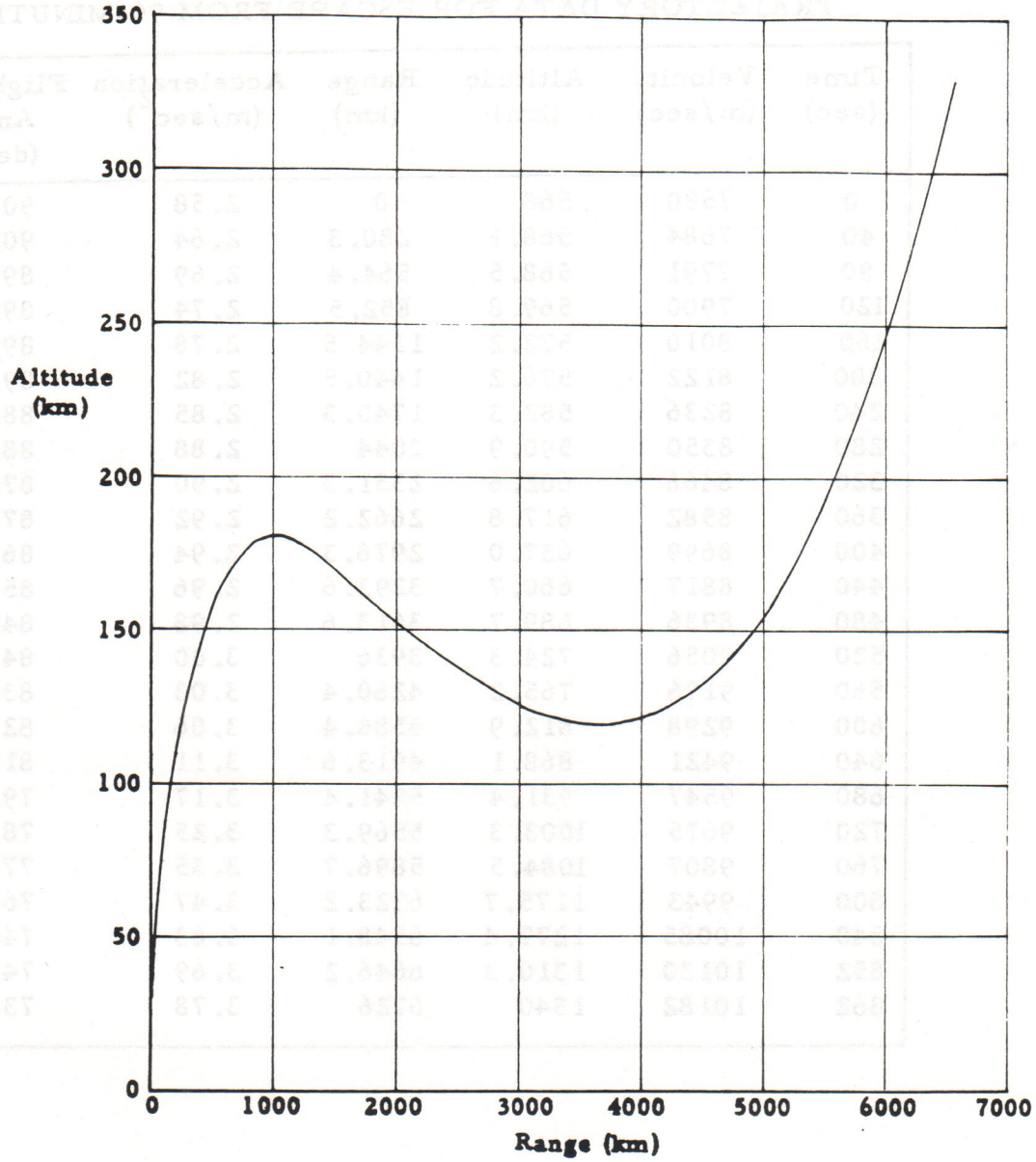


Fig. II-16. Powered Trajectory for Escape from the Earth

4. Landing on the Moon with Midcourse Correction

The last and probably the most critical phase of the earth-moon trajectory is the lunar landing. The final touchdown should be at the

UNCLASSIFIED
CONFIDENTIAL
SECRET

TABLE II-7
TRAJECTORY DATA FOR ESCAPE FROM 96-MINUTE ORBIT

| Time (sec) | Velocity (m/sec) | Altitude (km) | Range (km) | Acceleration ($m/sec^2$) | Flight Path Angle (deg) |
|---|---|---|---|---|---|
| 0 | 7580 | 568 | 0 | 2.58 | 90 |
| 40 | 7684 | 568.1 | 280.3 | 2.64 | 90 |
| 80 | 7791 | 568.5 | 564.4 | 2.69 | 89.9 |
| 120 | 7900 | 569.8 | 852.5 | 2.74 | 89.7 |
| 160 | 8010 | 572.2 | 1144.5 | 2.78 | 89.4 |
| 200 | 8122 | 576.2 | 1440.5 | 2.82 | 89.1 |
| 240 | 8236 | 582.3 | 1740.3 | 2.85 | 88.7 |
| 280 | 8350 | 590.9 | 2044 | 2.88 | 88.3 |
| 320 | 8466 | 602.6 | 2351.3 | 2.90 | 87.7 |
| 360 | 8582 | 617.8 | 2662.2 | 2.92 | 87.1 |
| 400 | 8699 | 637.0 | 2976.3 | 2.94 | 86.5 |
| 440 | 8817 | 660.7 | 3293.6 | 2.96 | 85.7 |
| 480 | 8936 | 689.7 | 3613.6 | 2.98 | 84.9 |
| 520 | 9056 | 724.3 | 3936 | 3.00 | 84.0 |
| 560 | 9176 | 765.2 | 4260.4 | 3.03 | 83.1 |
| 600 | 9298 | 812.9 | 4586.4 | 3.06 | 82.1 |
| 640 | 9421 | 868.1 | 4913.6 | 3.11 | 81.0 |
| 680 | 9547 | 931.4 | 5241.4 | 3.17 | 79.8 |
| 720 | 9675 | 1003.3 | 5569.3 | 3.25 | 78.6 |
| 760 | 9807 | 1084.5 | 5896.7 | 3.35 | 77.3 |
| 800 | 9943 | 1175.7 | 6223.2 | 3.47 | 76.0 |
| 840 | 10085 | 1277.4 | 6548.1 | 3.63 | 74.6 |
| 852 | 10130 | 1310.3 | 6646.2 | 3.69 | 74.2 |
| 862 | 10182 | 1340 | 6726 | 3.78 | 73.9 |

proper location and should be very soft in order not to damage equipment or injure personnel. Without braking, the lunar impact velocity would be approximately 3000 m/sec, which is the resultant of the moon's velocity and the vehicle velocity in inertial space. The addition of these velocity vectors results in an arrival velocity at the lunar surface which is always hyperbolic or a velocity which is always greater than the lunar escape velocity. A simplified sketch of the lunar landing phase is shown in Fig. II-18. From this geometry, it is apparent that the leading part of the moon is favored for a landing.

CONFIDENTIAL
UNCLASSIFIED

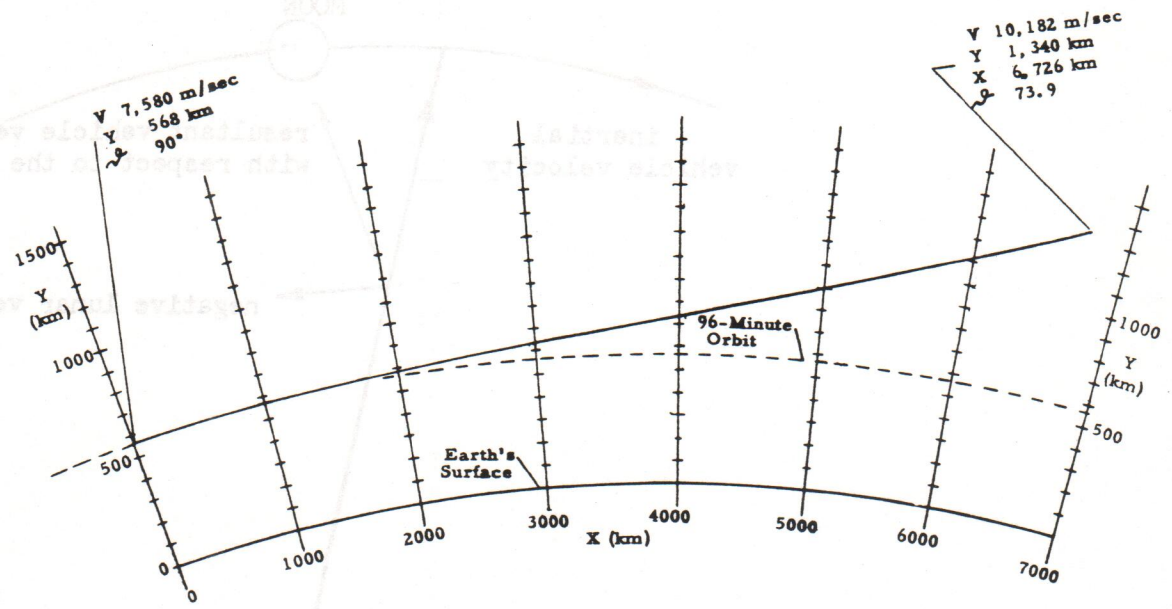


FIGURE ESCAPE FROM 96-MINUTE ORBIT

Fig. II-17. Escape from 96-Minute Orbit

The maneuverability of the landing vehicle will be limited during the braking phase of the descent to the lunar surface. This limitation is due primarily to the limited fuel supply for this purpose. Landing at the proper location on the surface must be a function of the combined action and accuracies of injection and midcourse guidance. Only small corrections to the flight path and limited control of the landing point will be made during the braking phase because of limited time and power. During this phase the maximum horizontal maneuverability is approximately 20 km distance on the moon's surface.

For final touchdown both lateral and vertical velocity components should be very low to obtain a hovering or very slowly descending flight near the surface. The propellant penalty for this final phase is small for reasonably short hovering times, and the control problem is simplified. To obtain proper touchdown at the desired location, various electronic aids will simplify the problem. One or more transponders on the lunar surface and television playback to the earth could be used to assist in this operation.

UNCLASSIFIED
CONFIDENTIAL

SECRET
CONFIDENTIAL

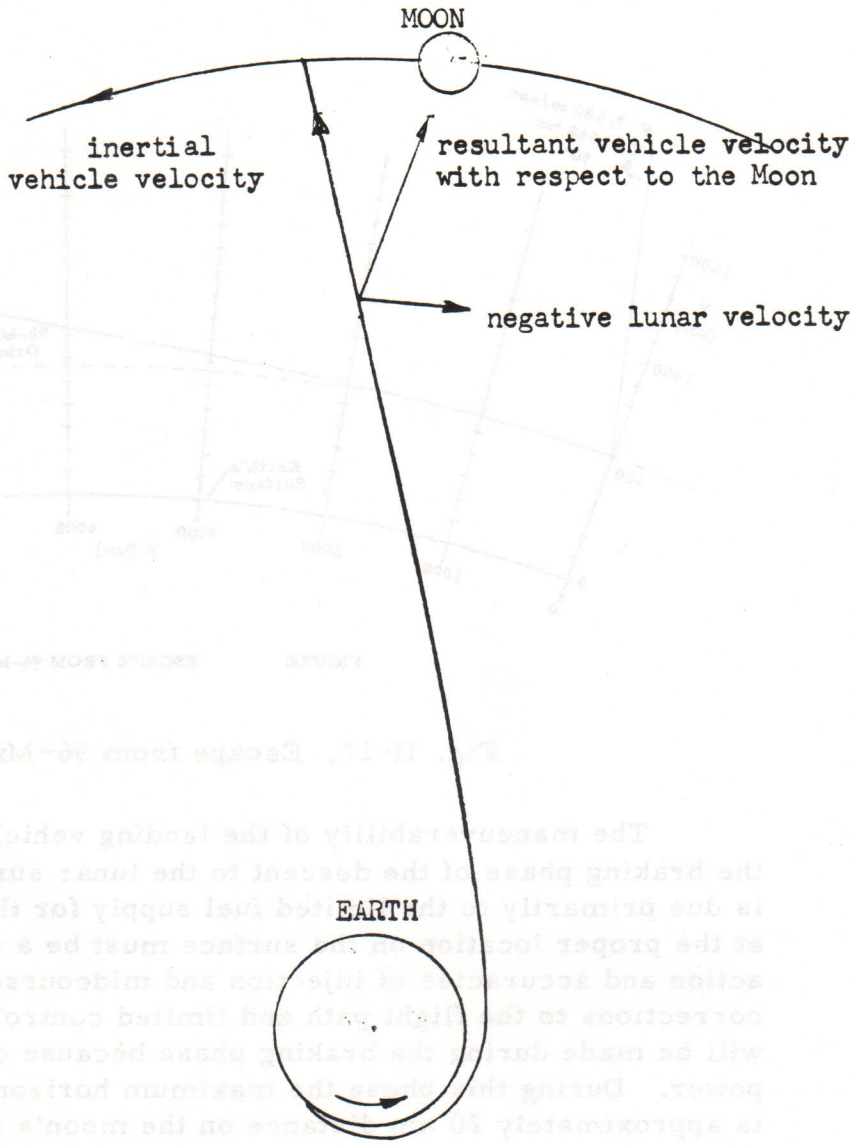


Fig. II-18. Lunar Landing Velocity Vectors

A direct approach to the moon's surface from the parabolic or hyperbolic coasting trajectory has been assumed. An indirect approach is also possible where the vehicle first enters a circumlunar satellite orbit. Landing on the moon would thus be made from the low altitude satellite orbit. From preliminary investigation it appears that the indirect approach would be favorable only if propellants for the return flight to earth could remain in the lunar orbit. This approach is also more difficult from the guidance and control viewpoint.

CONFIDENTIAL
CONFIDENTIAL

CONFIDENTIAL
UNCLASSIFIED

5. Direct Lunar-Earth Return Flight

a. Trajectory

For a return trajectory to the earth from the moon, the flight geometry will be similar to that of an earth-moon transfer. At the final phase of the trajectory the entry is made through the earth's atmosphere in the direction of earth rotation. A sketch of the lunar return trajectory is given in Fig. II-19.

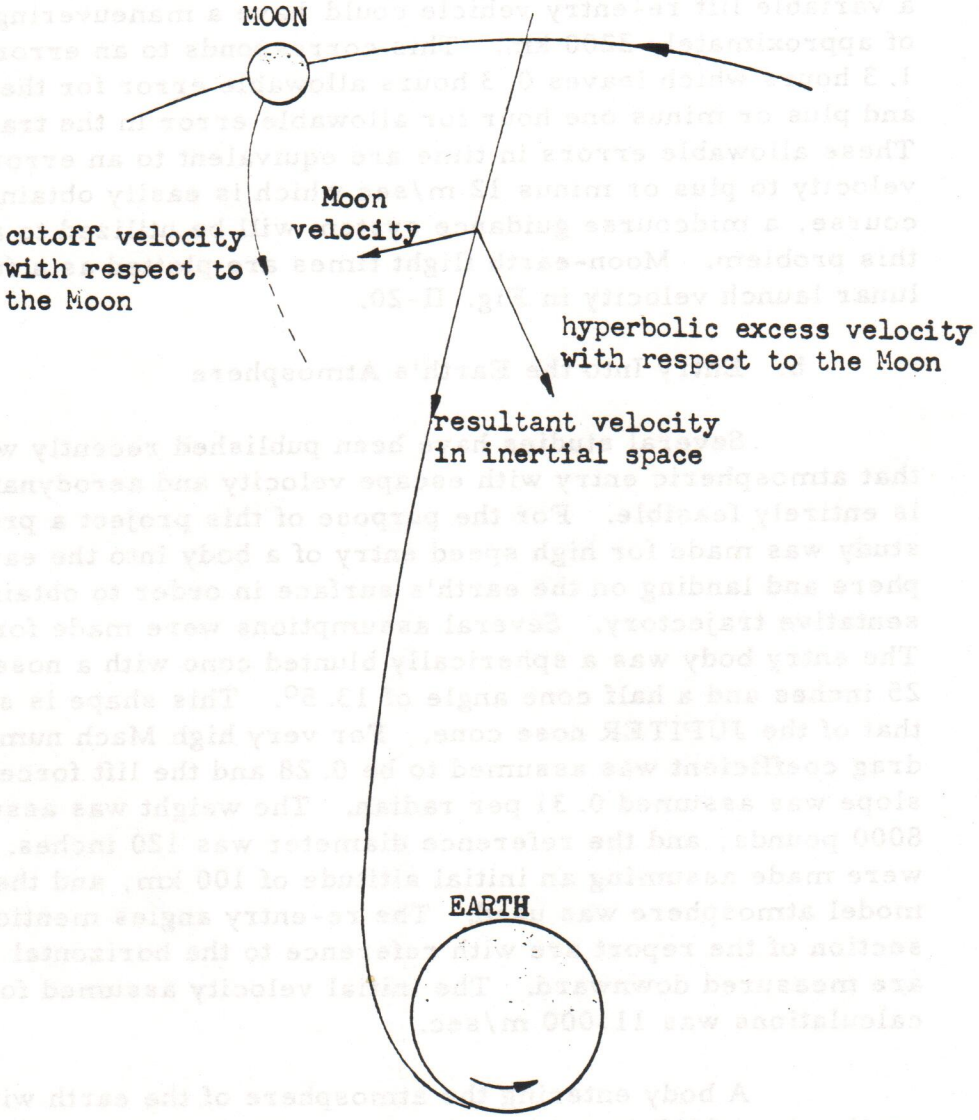


Fig. II-19. Direct Lunar-Earth Return Trajectory

UNCLASSIFIED
CONFIDENTIAL

In the return trajectory the most difficult problems will probably involve the entry and landing phases, and arrival at a preselected landing location. In order to land at the proper location on the earth, the time of launch from the lunar site and the total flight time from the earth to the moon must be carefully controlled. For the requirements to land on the earth irrespective of location, the lunar launch time is not critical since the earth appears to be very nearly fixed in the lunar sky. But for spot landing a one-hour error in the landing time corresponds to an error in landing location of approximately 1700 km distance on the surface of the earth. However, a variable lift re-entry vehicle could have a maneuvering capability of approximately 2200 km. This corresponds to an error in time of 1. 3 hours which leaves 0. 3 hours allowable error for the launch time and plus or minus one hour for allowable error in the transfer time. These allowable errors in time are equivalent to an error in injection velocity to plus or minus 12 m/sec which is easily obtainable. Of course, a midcourse guidance system will be utilized to alleviate this problem. Moon-earth flight times are plotted as a function of lunar launch velocity in Fig. II-20.

b. Entry Into the Earth's Atmosphere

Several studies have been published recently which prove that atmospheric entry with escape velocity and aerodynamic braking is entirely feasible. For the purpose of this project a preliminary study was made for high speed entry of a body into the earth's atmosphere and landing on the earth's surface in order to obtain a representative trajectory. Several assumptions were made for this study. The entry body was a spherically blunted cone with a nose radius of 25 inches and a half cone angle of 13. 5°. This shape is similar to that of the JUPITER nose cone. For very high Mach numbers, the drag coefficient was assumed to be 0. 28 and the lift force coefficient slope was assumed 0. 31 per radian. The weight was assumed to be 8000 pounds, and the reference diameter was 120 inches. Calculations were made assuming an initial altitude of 100 km, and the ARDC 1956 model atmosphere was used. The re-entry angles mentioned in this section of the report are with reference to the horizontal plane and are measured downward. The initial velocity assumed for these calculations was 11,000 m/sec.

A body entering the atmosphere of the earth without the application of lift is subjected to longitudinal decelerations which vary to a considerable degree with the angle of entry. The entry angle

CONFIDENTIAL
SECRET
UNCLASSIFIED

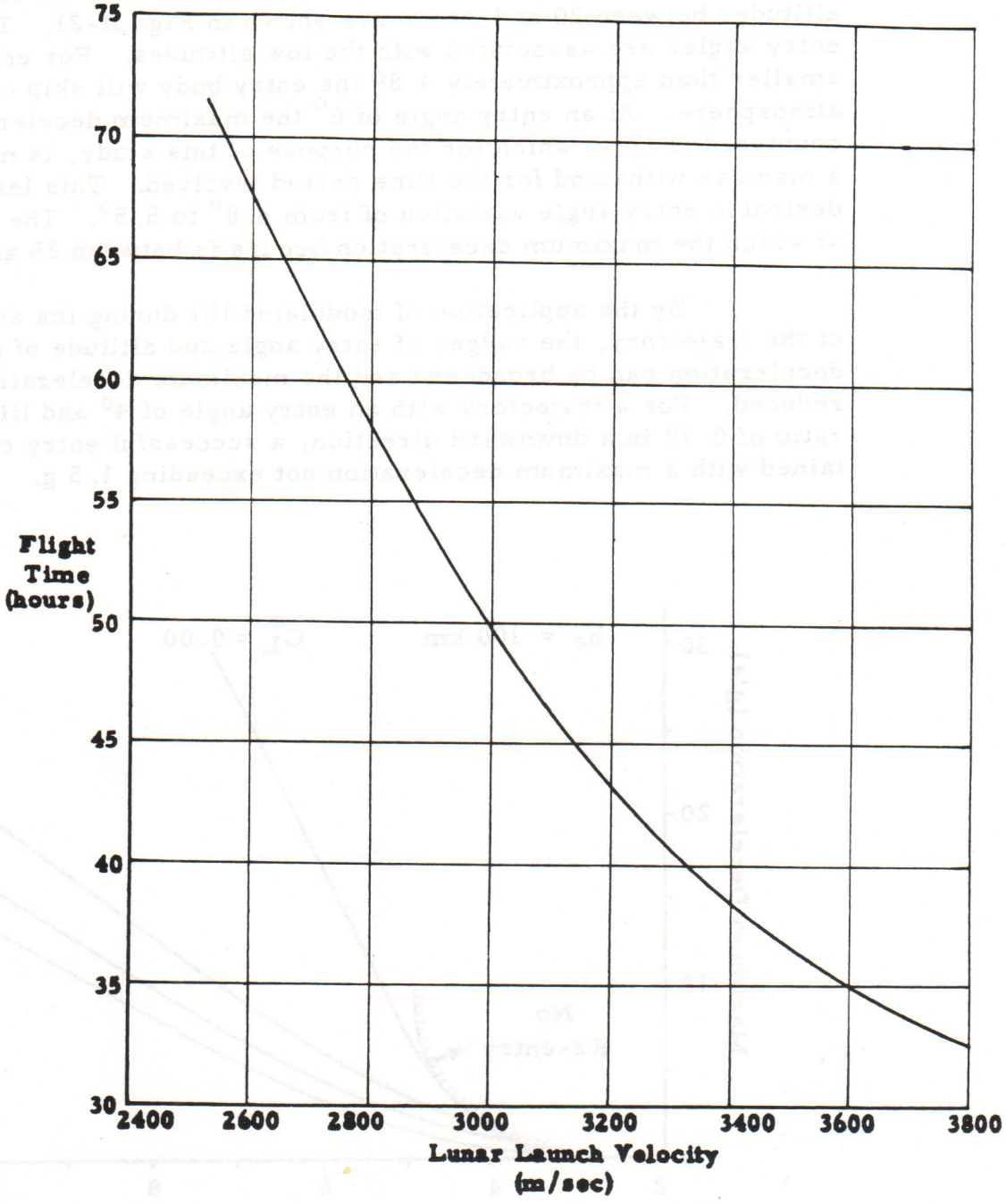


Fig. II-20. Lunar Earth Flight Time Versus Launch Velocity

UNCLASSIFIED
SECRET
CONFIDENTIAL

and the corresponding maximum deceleration that would occur at altitudes between 20 and 30 km are shown in Fig. II-21. The large entry angles are associated with the low altitudes. For entry angles smaller than approximately 4.8° the entry body will skip out of the atmosphere. At an entry angle of 6° the maximum deceleration encountered is 17 g, which for the purpose of this study, is more than a man can withstand for the time period involved. This leaves a desirable entry angle variation of from 4.8° to 5.5°. The altitude at which the maximum deceleration occurs is between 25 and 40 km.

By the application of modulated lift during the entry phase of the trajectory, the ranges of entry angle and altitude of maximum deceleration can be broadened and the maximum deceleration can be reduced. For a trajectory with an entry angle of 4° and lift-to-drag ratio of 0.79 in a downward direction, a successful entry can be obtained with a maximum deceleration not exceeding 1.5 g.

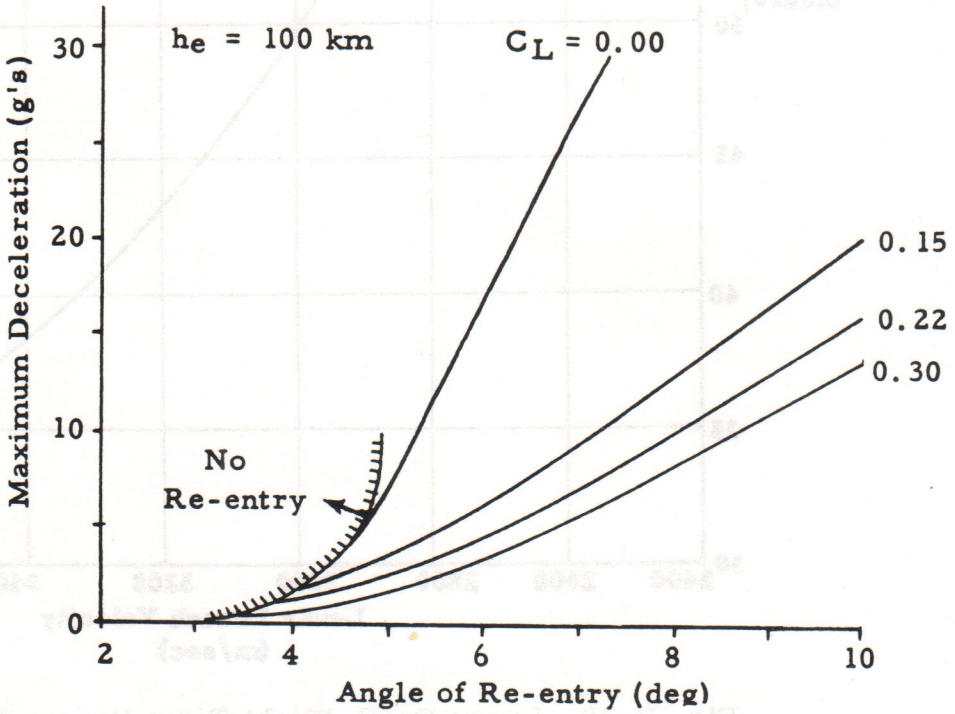


Fig. II-21. Deceleration Versus Angle of Re-entry Data for Earth Atmosphere (at 11,000 m/sec velocity)

CONFIDENTIAL
UNCLASSIFIED

For entry angles greater than $4^{\circ}$ an upward lift force was applied during the first phase to keep the maximum deceleration at a low value. When the trajectory levels off, a downward lift force is applied to maintain a constant altitude or a slightly negative grade to reduce the velocity. When the velocity is reduced below circular velocity, the lift force is again changed to an upward direction to hold the deceleration at a low level.

By applying this technique, it should always be possible to keep the level of deceleration at a reasonable value for entry angles up to approximately $8^{\circ}$. In Fig. II-22, the altitude and deceleration of typical entry trajectories are plotted as a function of flight time for three entry angles. It can be seen that the most favorable trajectories from a deceleration viewpoint are the ones with entry angles of approximately $4^{\circ}$ to $6^{\circ}$.

c. Aerodynamic Heating

Aerodynamic heating will pose a difficult problem during entry into the earth's atmosphere. There will be a high heat flow rate from the boundary layer to the surface of the vehicle, which is somewhat proportional to the vehicle deceleration. By maintaining very low decelerations, the energy flux can be radiated at high wall temperatures, but this requires a well insulated vehicle capable of relatively high aerodynamic lift. This approach as the only means of heat rejection is not considered favorable in this program because of the lower payload-to-structure weight ratio. With very high decelerations a high heat flow rate will be created over a short period of time giving a relatively low total heat flow. This heat can be dissipated by ablation of the surface layers on the vehicle. For the solution of the entry problem, a compromise will be reached between the low deceleration trajectory with gradual temperature buildup over a long period, and the high deceleration case with a high flow rate for a short period. It is estimated at the present time that successful entry can be accomplished with not more than 15 percent of the weight of the body available for ablation type heat protection material.

## 6. Guidance and Control Accuracy Requirements

Realistic guidance and control accuracy requirements result from a compromise between three factors as follows: (1) desirable operational tolerances, (2) attainable accuracy of the G&C instruments,

UNCLASSIFIED
CONFIDENTIAL

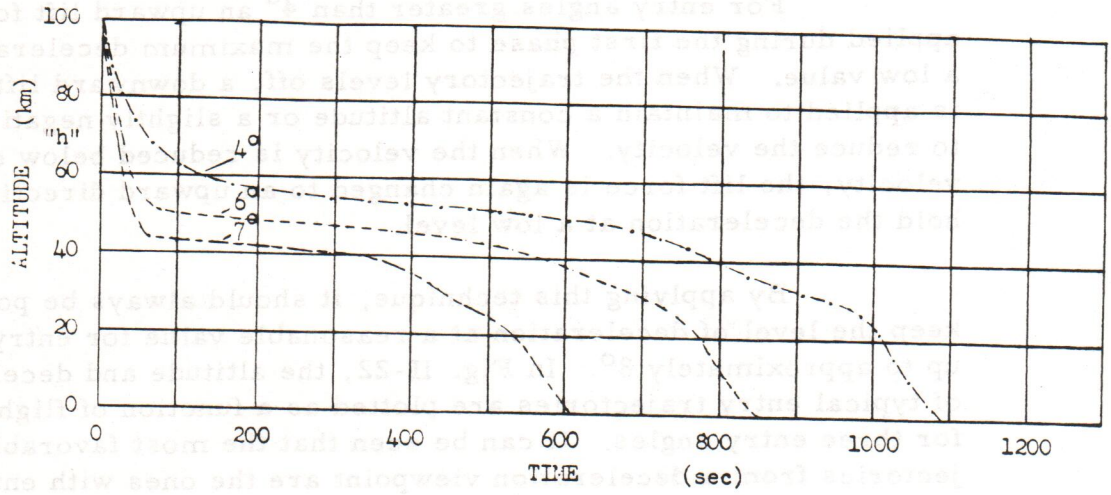


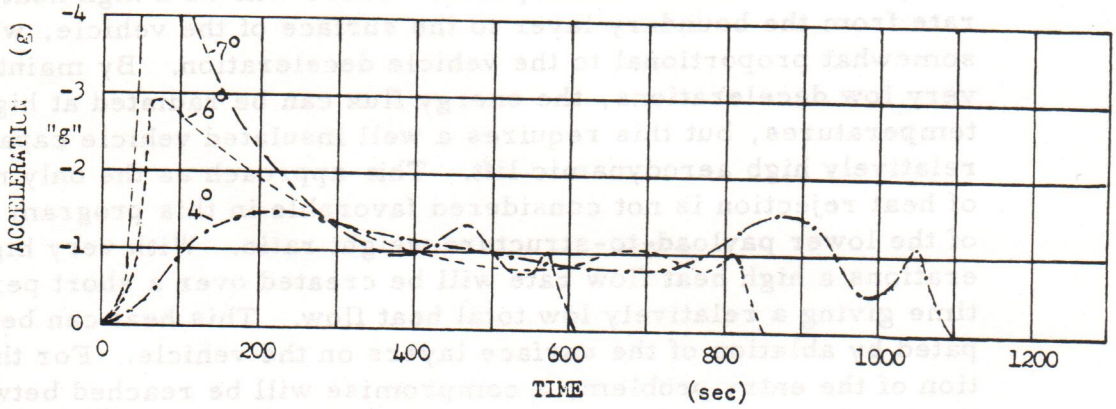


Fig. II-22. Altitude and Acceleration Versus Time Data for Earth Atmospheric Entry (11, 000 m/sec velocity)

and (3) possible overall vehicle system accuracies. The first two factors listed above have been considered here in order to obtain the guidance and control accuracy requirements. The possible system accuracies, which are influenced by external disturbances and compromises between guidance and propulsion, have not been studied in detail; however, it is expected that results of such a study will not materially change the present requirements.

CONFIDENTIAL
UNCLASSIFIED

The desirable and feasible guidance and control accuracy requirements are summarized in Table II-8. The tolerances and accuracies given in the table are $3\sigma$-values*. Unless otherwise stated, the velocity tolerances are equal in all three coordinates, thus also giving the directional tolerance of the velocity vectors. Throughout the table, the earth satellite mentioned is assumed to be in an equatorial, circular 96-minute orbit at about 570 km altitude. The injection velocity tolerances are based upon available guidance and control instrument accuracies, as well as flight mechanics considerations.

In general, the given launch time and injection tolerances would lead to lower accuracy at the end of a mission than is required. This variance is taken up by several guidance and control correction schemes such as variable azimuth and pitch programs, midcourse and terminal guidance (See III. B. 5). No radical improvements, with respect to accuracy of the presently available guidance and control instruments, are required to attain the given accuracies at the end of the various missions. The proposed integrated guidance and control systems offer the choice of optimum solutions during most phases of the flights and also provide for frequent readjustment of their parameters. The characteristics of the proposed guidance and control systems, therefore, approach those of a closed loop system during most phases of the missions. Difficulties are expected to arise in those phases of a flight which have open loops and large possible disturbances in the guidance scheme. From this viewpoint, three problem areas are apparent in connection with the guidance and control accuracy requirements: (1) the launch time tolerances for launch from an equatorial earth satellite orbit would be $\pm$ one second, if no correction schemes were employed. The tolerance of $\pm$ one minute stated in Table II-8 may be attained if a suitable correction scheme combining azimuth, pitch program, and velocity cutoff control is used. Such a guidance scheme requires further development. (2) The lateral velocity at touchdown on the lunar surface must be zero, or else the landing gear must be designed to take up any remaining lateral velocity, (3) manned entry upon lunar return, particularly with near-earth escape velocity, requires additional study. Preliminary work shows that the application of body-lift during entry could give the required final accuracies, and further increases in launch time tolerances may be feasible.

* $\sigma$ : standard variation.

UNCLASSIFIED
CONFIDENTIAL

Table II-8
GUIDANCE ACCURACY REQUIREMENTS ($3\sigma$ values)

| Mission | Launch Time Tolerance | Injection Velocity Tolerance | Accuracy Requirements at End of Mission | | | Remarks, Assumptions |
|---|---|---|---|---|---|---|
| | | | Position | Velocity | Time | |
| From Earth Surface to Lunar Surface, Soft Spot Landing | ±5 min | ± 3 m/sec | ±1.5 km | ± 5 m/sec vertically | | Azimuth correction at launch<br>Suitable landing gear<br>The lateral velocity at touch-down is zero |
| From Earth Satellite to Lunar Surface, Soft Spot Landing | ±1 min | ± 3 m/sec | ±1.5 km | ± 5 m/sec vertically | | Launch time tolerance increased to given value if suitable corrections are made<br>Suitable landing gear<br>The lateral velocity at touch-down is zero |
| From Lunar Surface to Earth Surface, Re-entry with Lift and Aerodynamic Braking | ±30 min | ±12 m/sec | ±10 km altitude at re-entry<br>±1500 km at recovery | ± 30 min | | Primary Objective: Survival of crew<br>Re-entry angle 5.5 +1.5° at 100 km altitude<br>Parachute recovery |
| From Earth Surface to Rendezvous with Earth Satellite | ±5 min | ± 3 m/sec | ±30 min | ±1 m/sec | ± 1 hr | Pitch program correction at equatorial launch (+5°)<br>Remaining 30 m distance may be reduced by human intervention or special guidance equipment |
| Re-entry from Earth Satellite Orbit With Lift and Aerodynamic Braking | ±1 min | ±3 m/sec | ±150 km at recovery | | | Parachute recovery |



CONFIDENTIAL
CONFIDENTIAL

CONFIDENTIAL
UNCLASSIFIED

## B. ORBITAL CARRIER AND SPACE VEHICLES

### 1. Carrier Vehicles - SATURN I and SATURN II

#### a. SATURN I

The SATURN I vehicle, shown in Fig. II-23, consists of a clustered booster with 1,504,000-pound lift-off thrust, a twin-engine second stage of about 360,000-pound thrust, and a lox/hydrogen ($O_2/H_2$) third stage of 30,000-pound thrust. The initial performance capability of this vehicle, based on the weights shown in Table II-9, is 30,000 pounds net payload in a 96-minute orbit and 7500 pounds net payload to earth escape velocity. The upper stages are based on minimum modification of existing missile hardware. Additional performance could be obtained by a redesign of the upper stages. The booster itself (Fig. II-24) is a clustered tank arrangement with eight tanks of 70-inch diameter clustered around a center lox tank of 105-inch diameter. Four of the outer 70-diameter tanks, located 90° apart, contain lox and the four remaining tanks contain RP-1 fuel. Structural loads are carried through the center lox tank and the four outer lox tanks. The structure is designed for recovery by parachute with water impact and return to launch site by a suitable ship. Propulsion is provided by eight North American Aviation H-1 engines of 188,000-pound sea-level thrust each. The propulsion system is designed so that the vehicle flight can be continued with one or even two of the eight engines not operating. The second stage shown in Fig. II-25 is a modified version of the TITAN booster. The engines are the Aerojet XLR 87, using lox-RP as propellant, with the expansion ratio of 15 to 1 and equipped for altitude start. The third stage is a modified $O_2/H_2$ CENTAUR stage. Propulsion is provided by two Pratt & Whitney RL-10 engines rated at 15,000-pound thrust each. The third stage, sized for 50,000 pounds of propellant, resulting in a near optimum staging, is shown in Fig. II-26.

#### b. SATURN II

The second generation SATURN vehicle (SATURN II) is based on a modified SATURN I booster. The basic SATURN II carrier vehicle shown in Fig. II-27 includes a 2,000,000-pound-thrust booster, incorporating eight 250,000-pound-thrust lox/RP-1 engines, a second stage incorporating two 500,000-pound-thrust $H_2/O_2$ engines, a third stage incorporating two 100,000-pound-thrust $H_2/O_2$ engines, and a fourth stage incorporating one 100-pound-thrust $H_2/O_2$ engine.

UNCLASSIFIED
CONFIDENTIAL

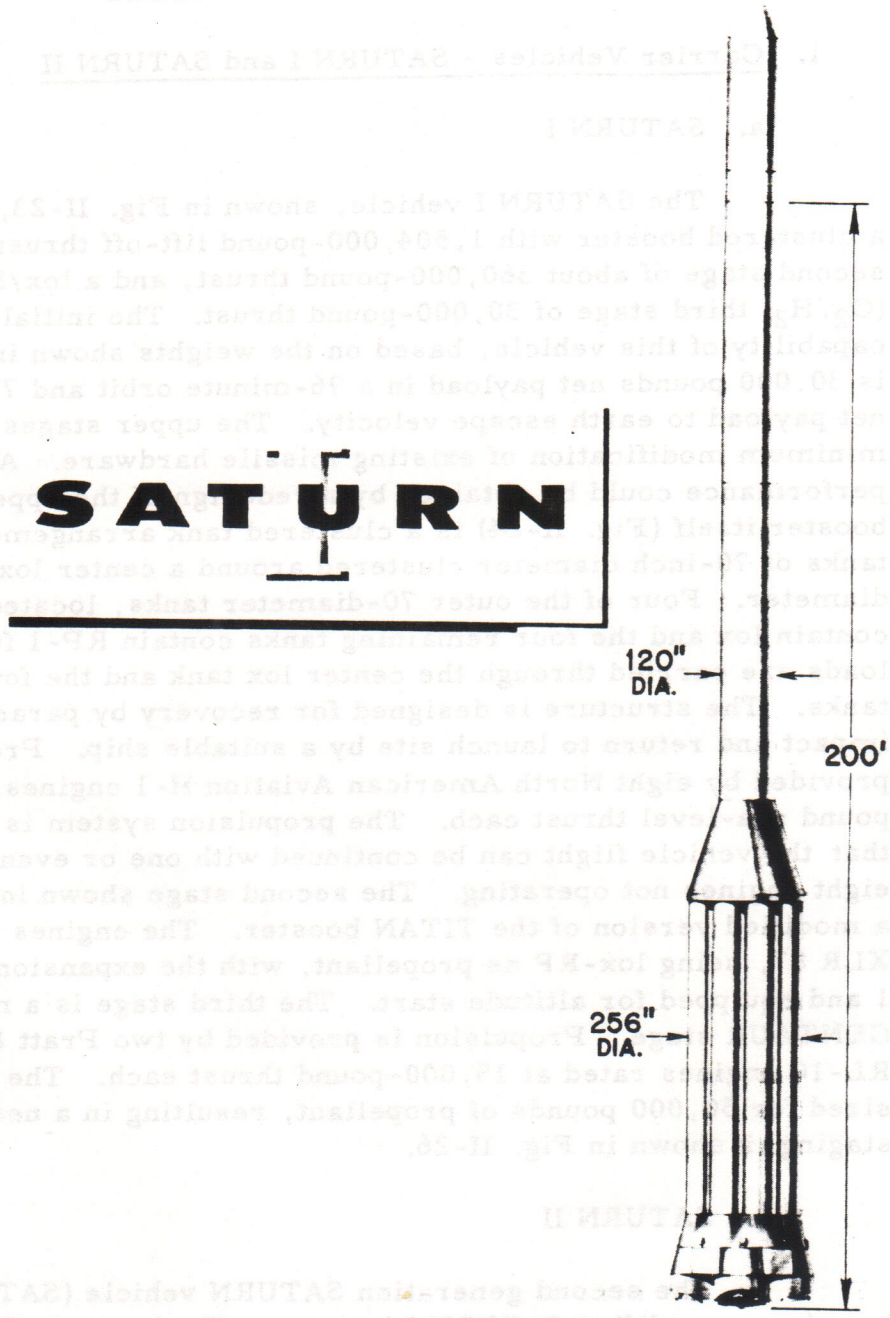


GE 52-1-59
9 MAY 1959

SECRET

Fig. II-23. SATURN I

SECRET
CONFIDENTIAL
UNCLASSIFIED

Table II-9
WEIGHT SUMMARY SATURN I INITIAL CONFIGURATION
96 - MINUTE ORBITAL VERSION

| Stage | I | II | III |
|---|---|---|---|
| Engine | 8 x H-1 | 2 x LR-89 | RL-10 |
| Propellant | $0_2$/RP-1 | $0_2$/RP-1 | $0_2/H_2$ |
| Thrust, lb | 8 x 188K | 2 x 189.5K | 2 x 15K |
| $I_{sp}$, sec | 258 (SL) | 303 (Vac) | 420 (Vac) |
| Missile Diameter, in. | 256 | 120 | 120 |
| Payload, lb | 331, 632 | 62, 352 | 30, 320 * |
| Guidance Compartment, lb | - | - | 500 |
| Guidance & Control, lb | - | 500 | 1, 500 |
| Fuselage, lb | 45, 000 | 6, 213 | 1, 178 |
| Propulsion, lb | 22, 400 | 4, 692 | 1, 127 |
| Recovery Equipment, lb | 6, 000 | - | - |
| Trapped Propellant, lb | 15, 500 | 1, 160 | 200 |
| Usable Residuals, lb | 7, 500 | 2, 150 | 1, 527 |
| Propellant Consumption, lb | 750, 000 | 215, 000 | 26, 000 |
| Structure Dry Weight, lb | 58, 500 | 11, 405 | 4, 305 |
| Structure Net Weight, lb | 80, 000 | 14, 715 | 6, 032 |
| Stage Weight, Loaded, lb | 830, 000 | 229, 715 | 32, 032 |
| Lift-Off Weight, lb | 1, 161, 632 | 331, 632 | 62, 352 |

* Nominal 30, 000 lb
* The escape version differs only in the III Stage payload - 7, 500 lb instead of 30, 320 lb - and correspondingly in lift-off and payload weights.



UNCLASSIFIED
CONFIDENTIAL
SECRET

SECRET
CONFIDENTIAL
UNCLASSIFIED

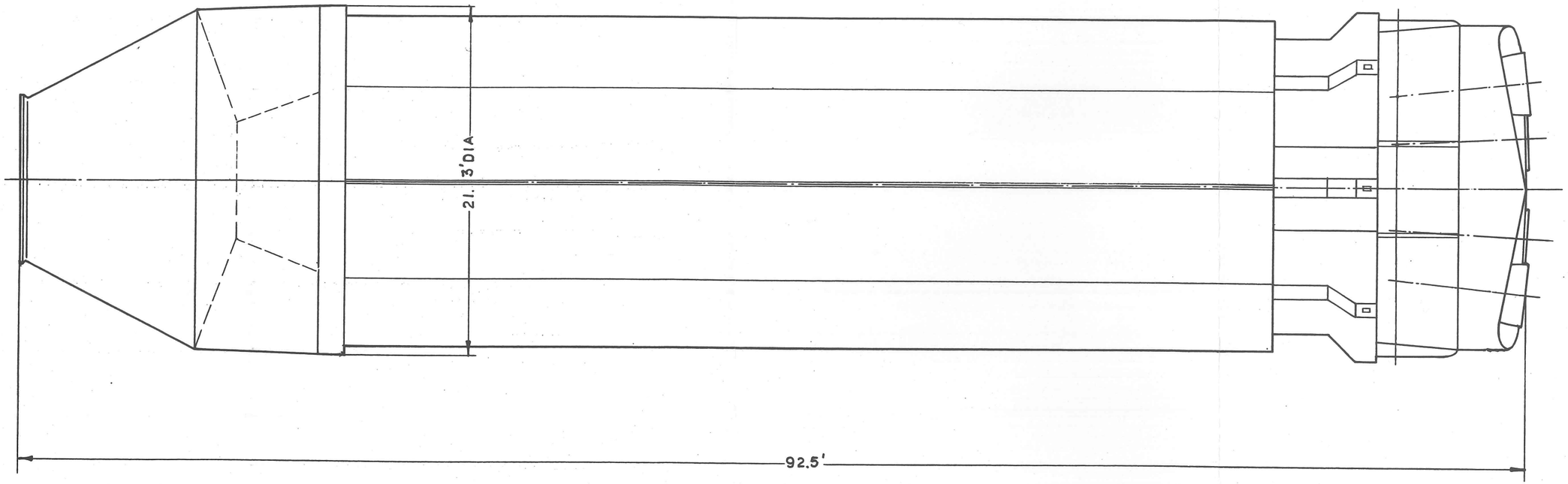


Fig. II-24. SATURN I - Booster


UNCLASSIFIED
CONFIDENTIAL

SECRET
CONFIDENTIAL
UNCLASSIFIED

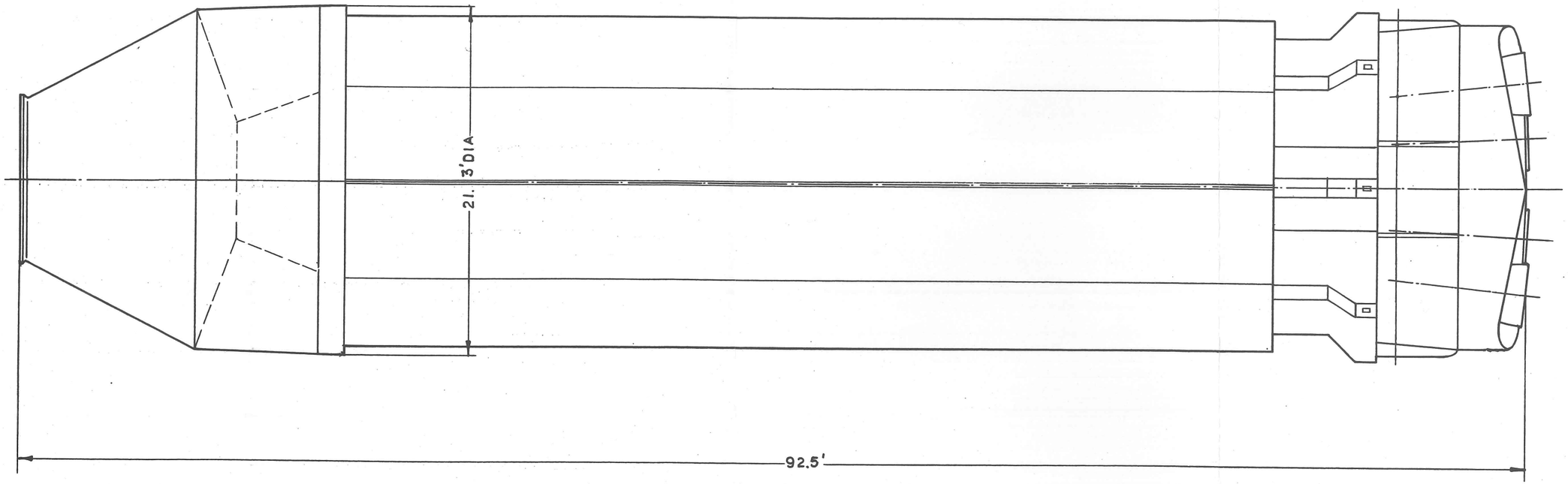


Fig. II-24. SATURN I - Booster



UNCLASSIFIED
CONFIDENTIAL

CONFIDENTIAL
UNCLASSIFIED

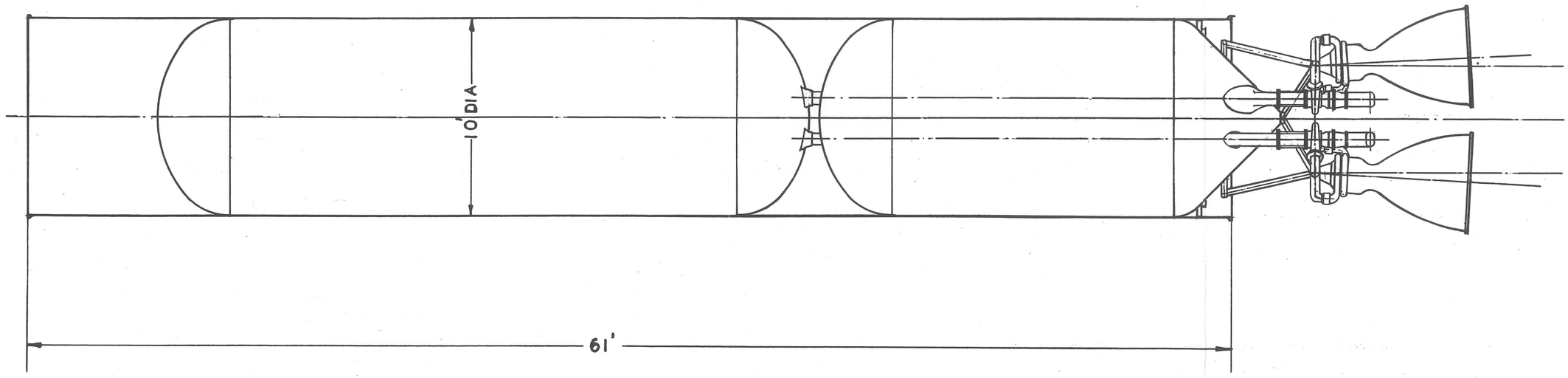


Fig. II-25. SATURN I - 2nd Stage



CONFIDENTIAL
UNCLASSIFIED

SECRET
CONFIDENTIAL
UNCLASSIFIED

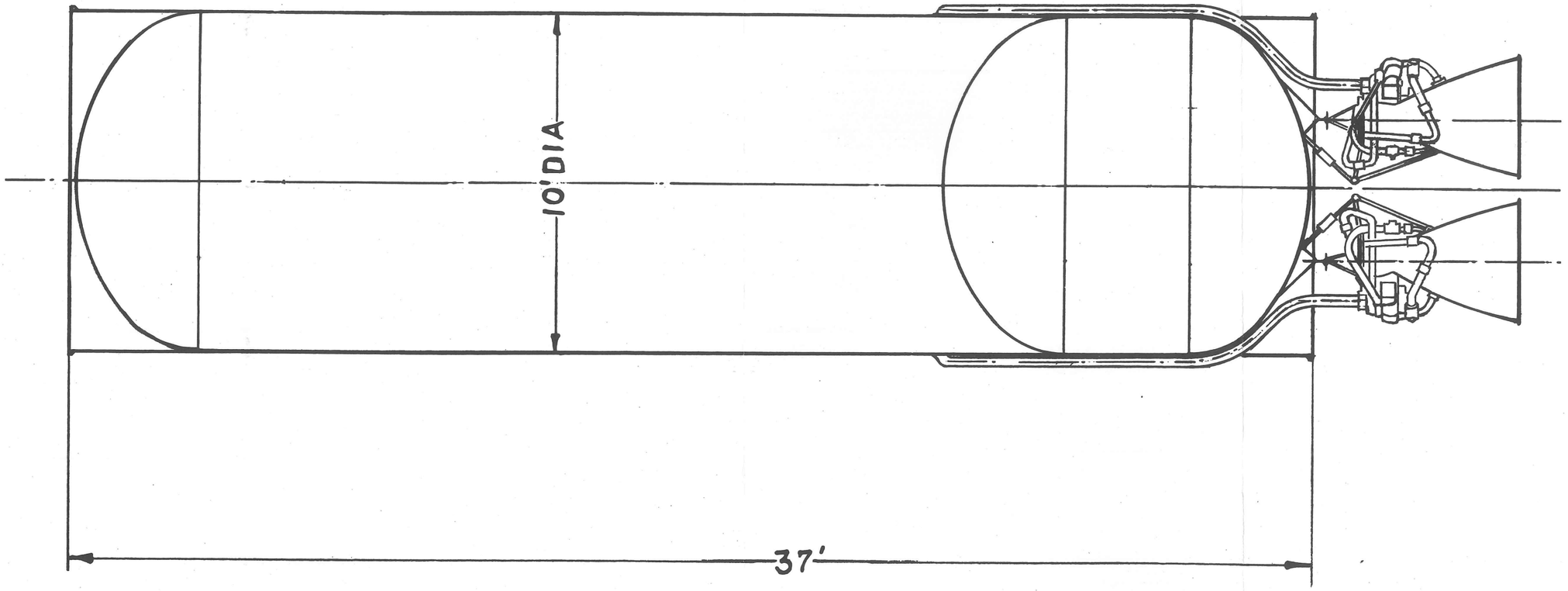


Fig. II-26. SATURN I - 3rd Stage



SECRET
CONFIDENTIAL
UNCLASSIFIED

SECRET
CONFIDENTIAL
UNCLASSIFIED

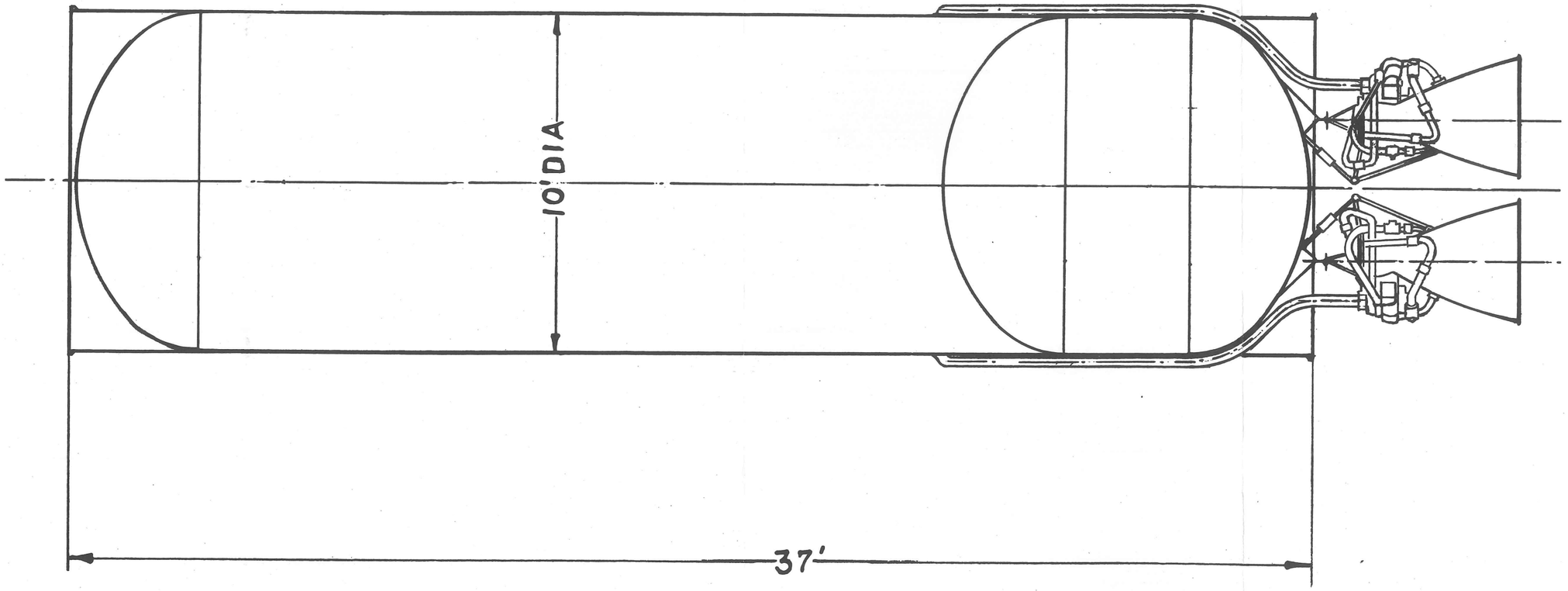


Fig. II-26. SATURN I - 3rd Stage



SECRET
CONFIDENTIAL
UNCLASSIFIED

SECRET
CONFIDENTIAL
UNCLASSIFIED

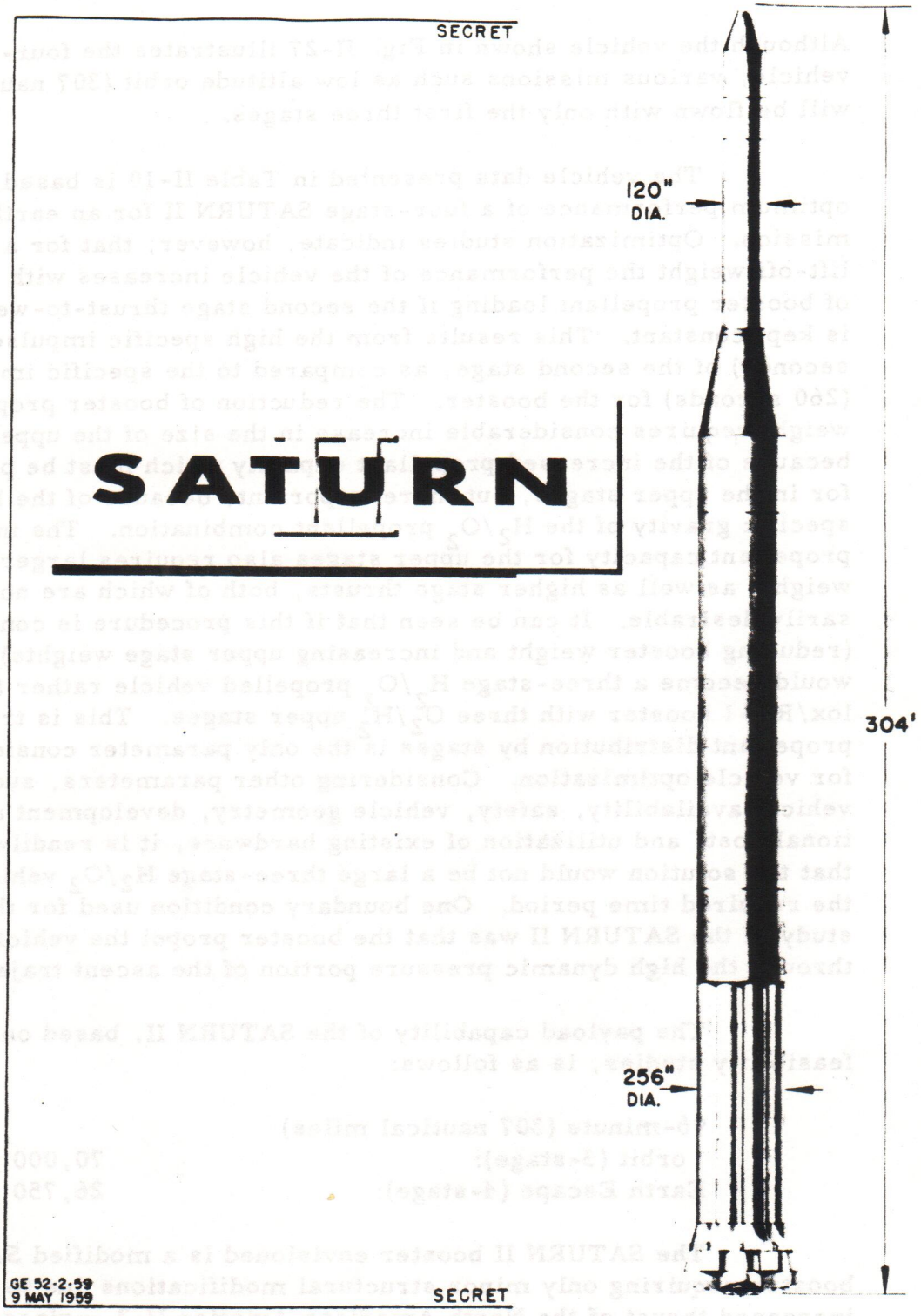


Fig. II-27. SATURN II

UNCLASSIFIED
CONFIDENTIAL

Although the vehicle shown in Fig. II-27 illustrates the four-stage vehicle, various missions such as low altitude orbit (307 nautical miles) will be flown with only the first three stages.

The vehicle data presented in Table II-10 is based on near optimum performance of a four-stage SATURN II for an earth-escape mission. Optimization studies indicate, however, that for a constant lift-off weight the performance of the vehicle increases with a reduction of booster propellant loading if the second stage thrust-to-weight ratio is kept constant. This results from the high specific impulse (420 seconds) of the second stage, as compared to the specific impulse (260 seconds) for the booster. The reduction of booster propellant weight requires considerable increase in the size of the upper stages because of the increased propellant capacity which must be provided for in the upper stages, but more important, because of the lower specific gravity of the $H_2/O_2$ propellant combination. The increased propellant capacity for the upper stages also requires larger dry weights as well as higher stage thrusts, both of which are not necessarily desirable. It can be seen that if this procedure is continued (reducing booster weight and increasing upper stage weights) the result would become a three-stage $H_2/O_2$ propelled vehicle rather than a lox/RP-1 booster with three $O_2/H_2$ upper stages. This is true if propellant distribution by stages is the only parameter considered for vehicle optimization. Considering other parameters, such as vehicle availability, safety, vehicle geometry, development and operational cost, and utilization of existing hardware, it is readily apparent that the solution would not be a large three-stage $H_2/O_2$ vehicle during the required time period. One boundary condition used for the initial study of the SATURN II was that the booster propel the vehicle well through the high dynamic pressure portion of the ascent trajectory.

The payload capability of the SATURN II, based on present feasibility studies, is as follows:

| | |
|---|---|
| 96-minute (307 nautical miles) orbit (3-stage): | 70,000 pounds |
| Earth Escape (4-stage): | 26,750 pounds |

The SATURN II booster envisioned is a modified SATURN I booster requiring only minor structural modifications due to the increased thrust of the North American Aviation H-2 engines and the heavier upper stages (Fig. II-28). The transition structure between the first and second stage will, however, require redesign due to the

CONFIDENTIAL
SECRET
UNCLASSIFIED

Table II-10
WEIGHT SUMMARY - SATURN II VEHICLE ESCAPE

| Stage | I | II | III | IV |
|---|---|---|---|---|
| Engine | 8 H-2 | | | |
| Propellant | $O_2$/RP-1 | $O_2/H_2$ | $O_2/H_2$ | $O_2/H_2$ |
| Thrust, lb | 8 x 250K | 2 x 500K | 2 x 100K | 1 x 100K |
| $I_{sp}$, sec | 260(s.l) | 420(vac) | 420 | 420 |
| Missile Diameter, in. | 256 | 256 | 256 | 256 |
| Payload, lb | 801,673 | 266,274 | 93,908 | 26,750 |
| Guidance Compartment, lb | | | | 500 |
| Guidance & Control, lb | | | 500 | 1,500 |
| Fuselage, lb | 46,300 | 26,000 | 8,400 | 2,800 |
| Propulsion, lb | 22,500 | 13,000 | 2,600 | 1,300 |
| Recovery Equipment, lb | 4,500 | | | |
| Trapped Propellant, lb | 15,500 | 4,000 | 800 | 400 |
| Usable Residuals, lb | 6,500 | 4,875 | 1,585 | 3,830 |
| Propellant Consumption, lb | 650,000 | 487,524 | 158,181 | 52,978 |
| Structure Weight, Dry, lb | 73,300 | 39,000 | 11,500 | 6,100 |
| Structure Net Weight, lb | 95,300 | 47,875 | 13,885 | 10,330 |
| Stage Weight, Loaded, lb | 745,300 | 535,399 | 172,366 | 63,308 |
| Lift-Off Weight, lb | 1,543,123 | 797,823 | 262,424 | 90,058 |

NOTE: The orbital version differs in that only 3 stages are utilized for the 96 - minute orbit. A payload of 70,000 pounds can be carried. Payload and lift-off weights have to be changed correspondingly.

UNCLASSIFIED
SECRET
CONFIDENTIAL

SECRET
CONFIDENTIAL
UNCLASSIFIED

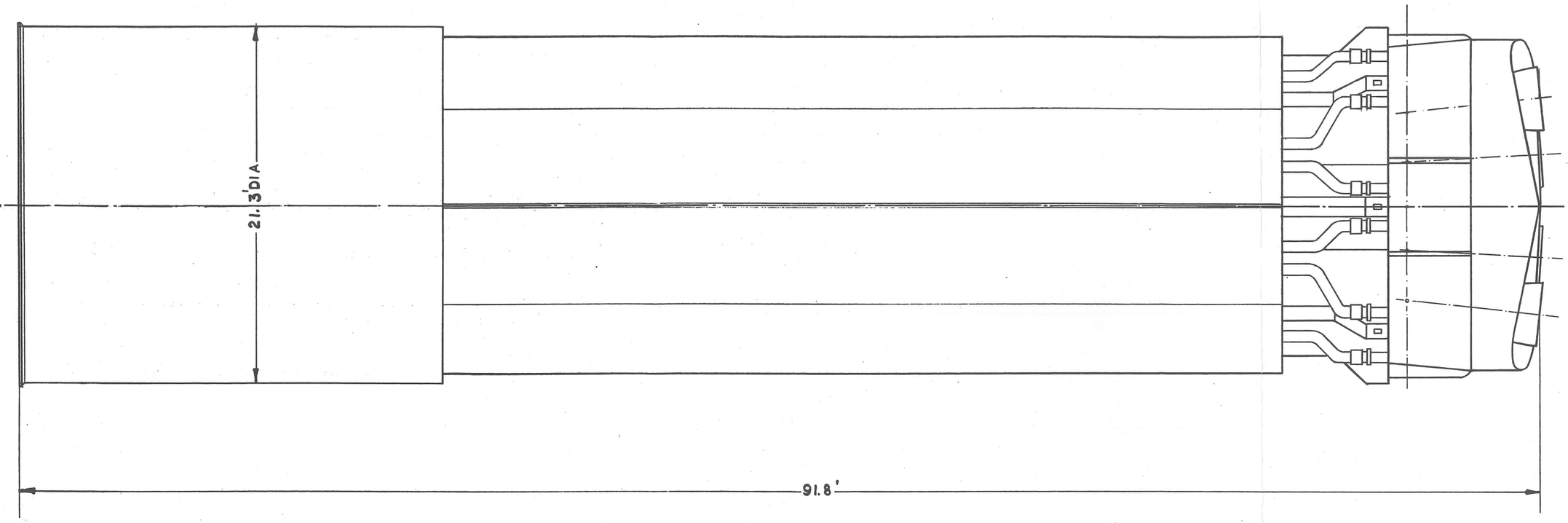


Fig. II-28. SATURN II - Booster



SECRET
CONFIDENTIAL
UNCLASSIFIED

SECRET
CONFIDENTIAL
UNCLASSIFIED

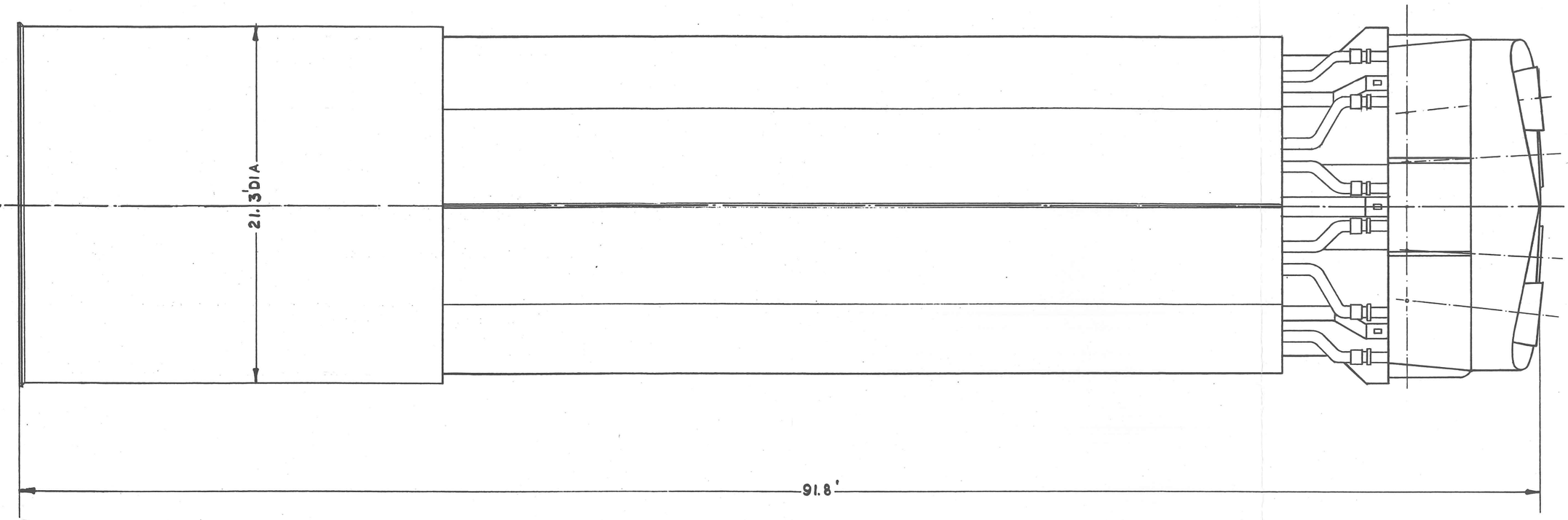


Fig. II-28. SATURN II - Booster



SECRET
CONFIDENTIAL
UNCLASSIFIED

large diameter of the second stage. The H-2 engine geometry, which is identical to the H-1 with the exception of a new turbopump and other simplifications, is such that it can be interchanged with the H-1 engine.

Propulsion in the second stages is provided by two 500 K $O_2/H_2$ engines. This arrangement appears desirable; however, four 250 K engines could be used. The tank structure is pressure stabilized to carry the upper-stage weights since the pressure to meet turbopump requirements exceeds that required for stabilization. The second stage is shown in Fig. II-29. The third stage is pressure stabilized for the same reasons as is the second stage. Propulsion is provided by two 100 K $O_2/H_2$ engines. The stage is designed to the same diameter (256 inches) as the orbit-to-moon vehicle into orbit, described later. For launching the orbit-to-moon vehicle into orbit, the vehicle will be mounted on the second stage of the transport vehicle, loaded with the propellant normally used in the third stage, and launched into the refueling orbit utilizing all three stages. After refueling the third stage which is now in orbit, the orbit-to-moon vehicle continues to the moon. The standard third stage is shown in Fig. II-30. The first stage of the orbit-to-moon (third stage of the basic SATURN vehicle) is identical with those used for other missions except that the propellant tank volume is increased by 13 percent and the forward transition structure is designed for the second stage of the orbit-to-moon vehicle (a fourth stage when considering the original combination on the launch pad) which performs the lunar landing.

The fourth stage ($O_2/H_2$) is shown in Fig. II-31. Trajectory-shaping requirements and gravity losses for this stage on the escape mission make a thrust-to-weight ratio of about 1.2 desirable.

Since the engines proposed for the upper stages of SATURN II (500,000-and 100,000-pound thrust, $H_2/O_2$) are not now under active development, and accelerated development program for each engine is required for this program.

c. SATURN II - Lunar Landing Vehicle (Direct)

The lunar landing vehicle going directly from the earth's surface to the lunar surface is shown in Fig. II-32. It is anticipated that high-energy propellants, which can be stored with minimum losses during the 51-hour trajectory time, are used for the landing maneuver. The actual landing technique, employing some hovering, and the

CONFIDENTIAL
SECRET
CONFIDENTIAL
UNCLASSIFIED

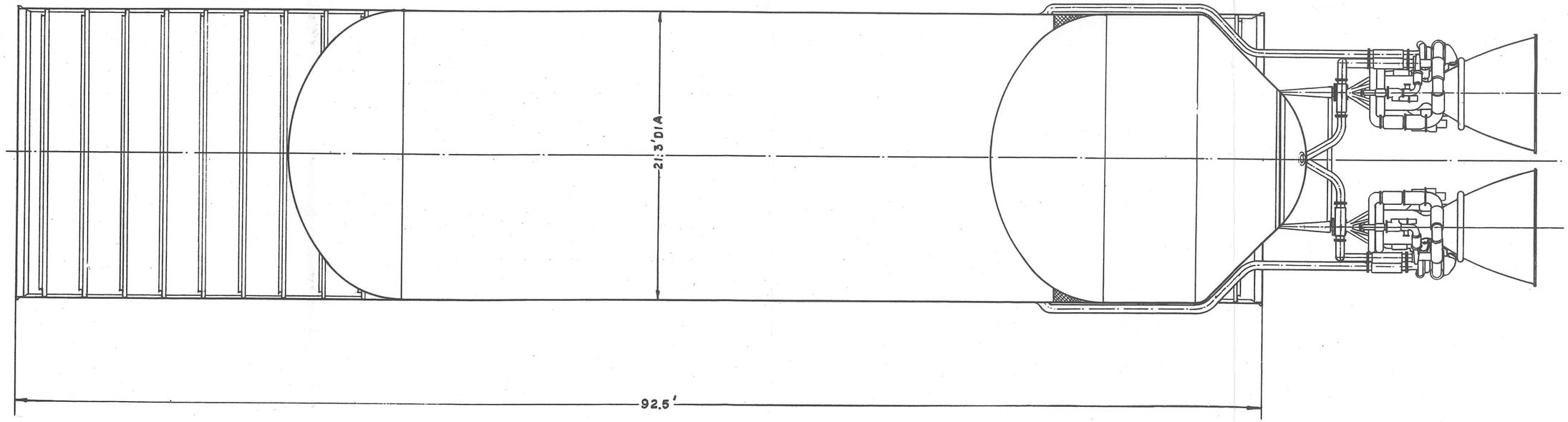


Fig. II-29. SATURN II - 2nd Stage


UNCLASSIFIED
CONFIDENTIAL

CONFIDENTIAL
SECRET
CONFIDENTIAL
UNCLASSIFIED

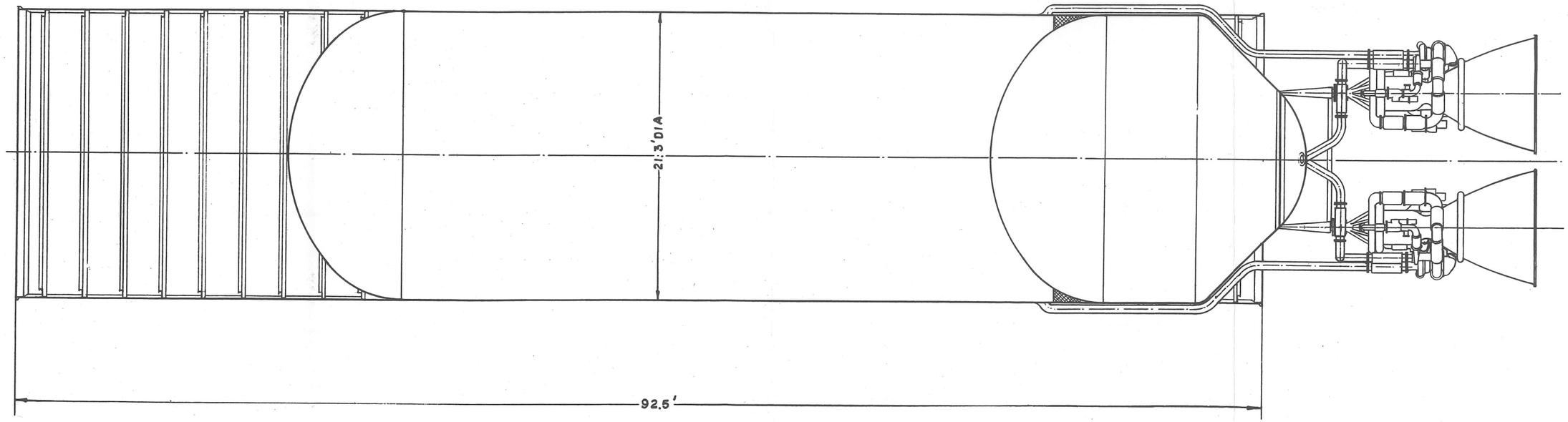


Fig. II-29. SATURN II - 2nd Stage


UNCLASSIFIED
CONFIDENTIAL

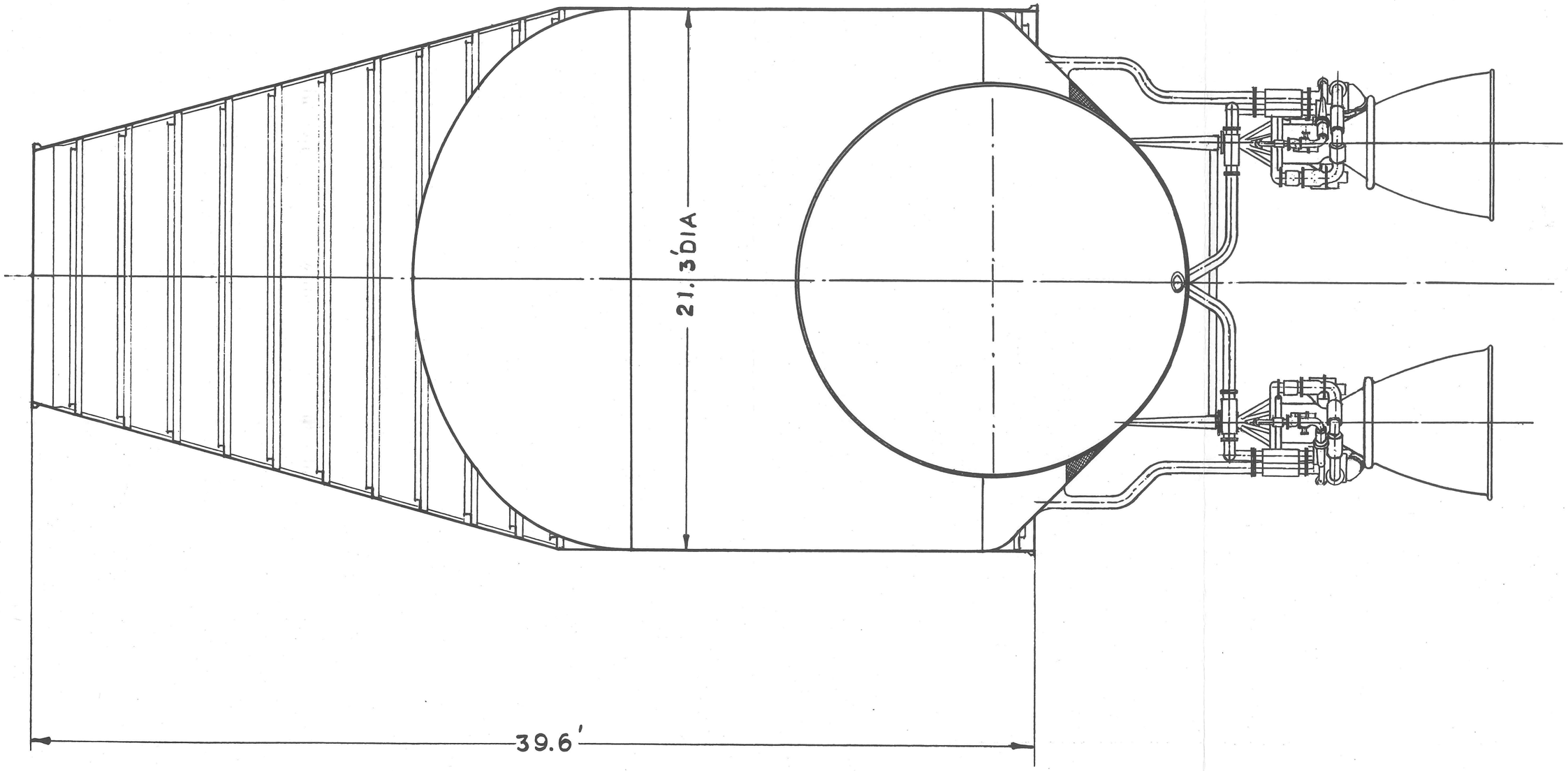


Fig. II-30. SATURN II - 3rd Stage

SECRET
CONFIDENTIAL
UNCLASSIFIED

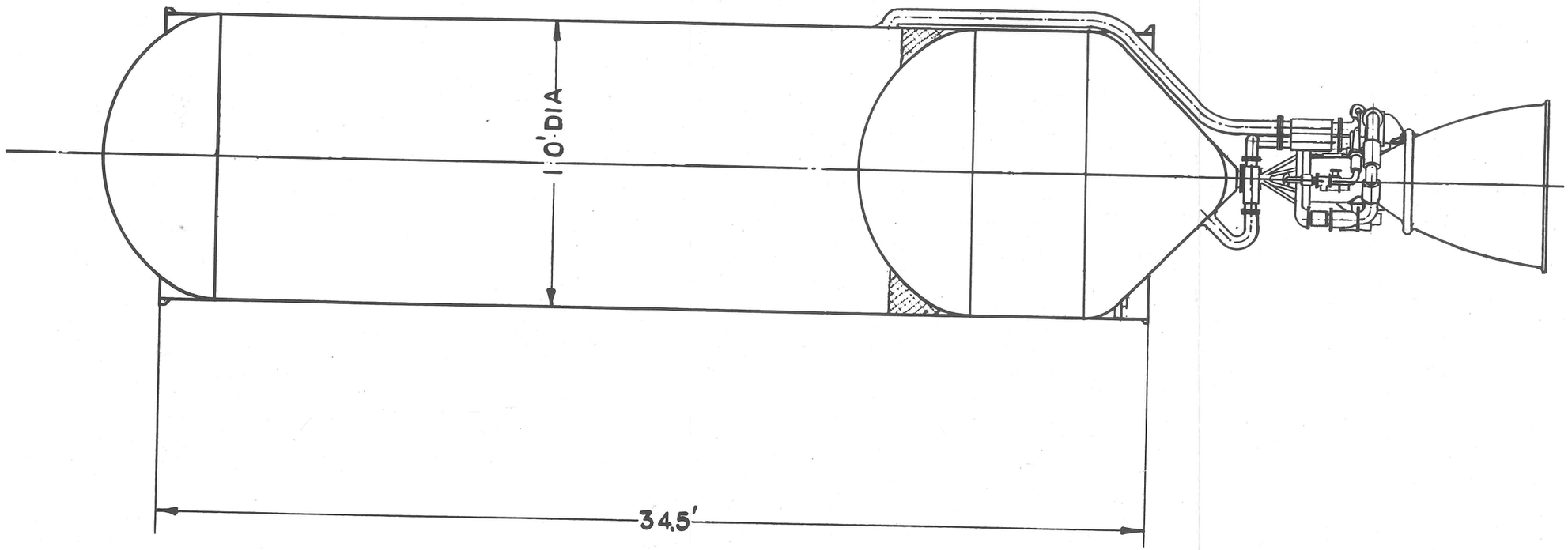


Fig. II-31. SATURN II - 4th Stage



UNCLASSIFIED
SECRET
CONFIDENTIAL

SECRET
CONFIDENTIAL
UNCLASSIFIED

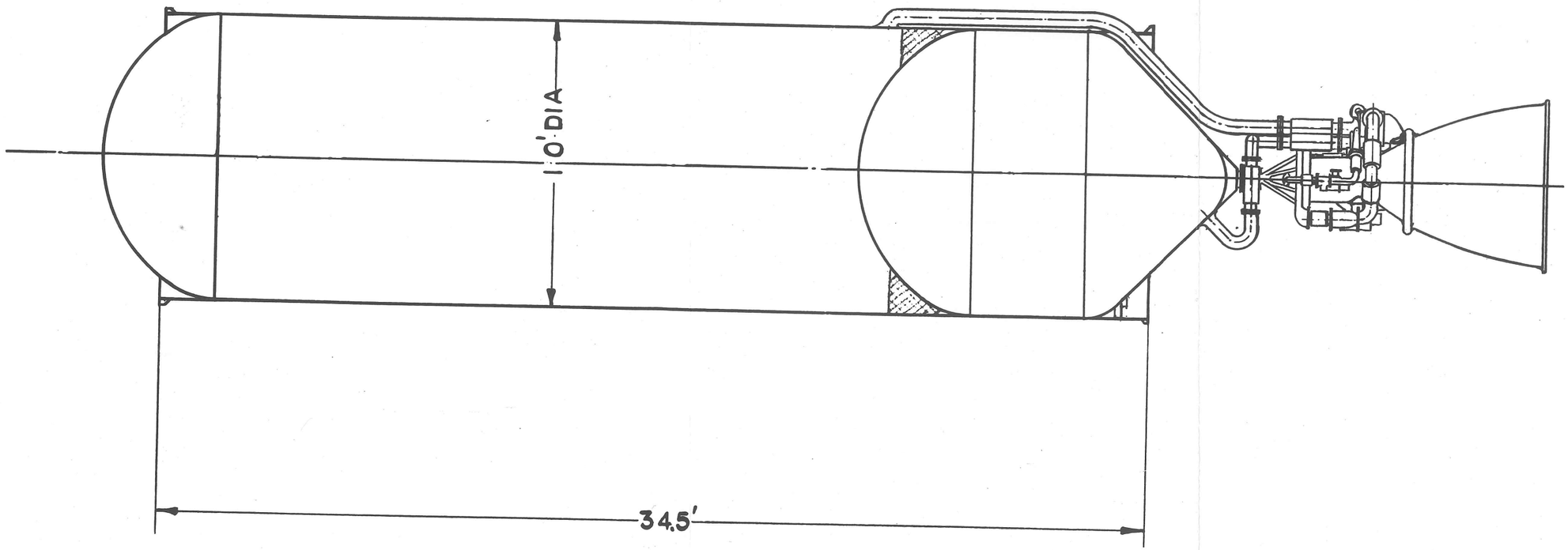


Fig. II-31. SATURN II - 4th Stage



UNCLASSIFIED
SECRET
CONFIDENTIAL

SECRET
CONFIDENTIAL
UNCLASSIFIED

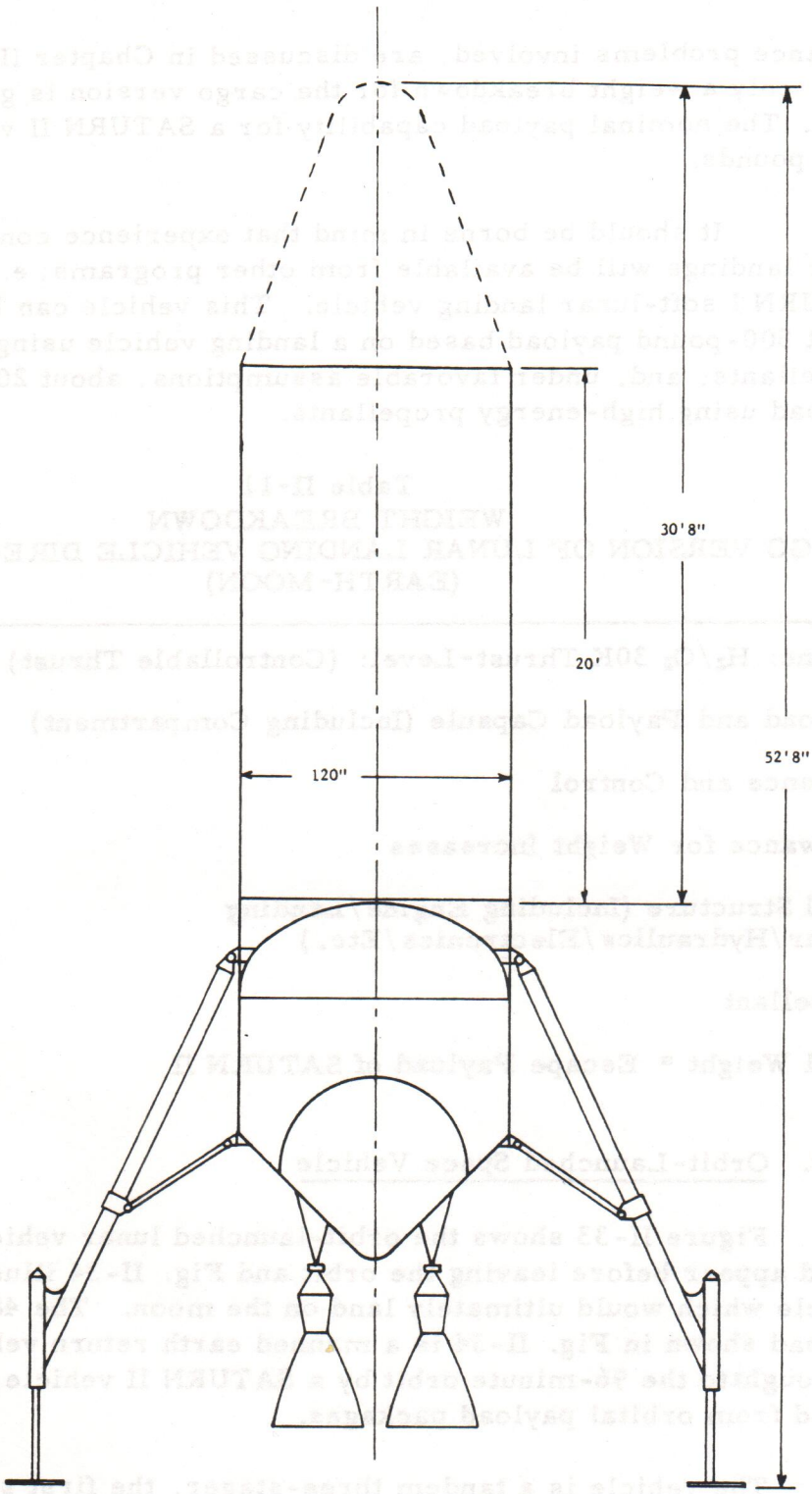


Fig. II-32. Lunar Landing Vehicle



UNCLASSIFIED
SECRET
CONFIDENTIAL

guidance problems involved, are discussed in Chapter III. B. 5. Therefore, only a weight breakdown for the cargo version is given in Table II-11. The nominal payload capability for a SATURN II vehicle is 6000 pounds.

It should be borne in mind that experience concerning soft lunar landings will be available from other programs; e. g. , the SATURN I soft-lunar landing vehicle. This vehicle can land between about 500-pound payload based on a landing vehicle using storable propellants, and, under favorable assumptions, about 2000-pound payload using high-energy propellants.

Table II-11
WEIGHT BREAKDOWN
CARGO VERSION OF LUNAR LANDING VEHICLE DIRECT DELIVERY
(EARTH-MOON)

| | |
|---|---|
| Engine: $H_2/O_2$ 30K Thrust-Level: (Controllable Thrust) | |
| Payload and Payload Capsule (Including Compartment) | 6, 000 lb |
| Guidance and Control | 2, 000 |
| Allowance for Weight Increases | 540 |
| Total Structure (Including Engine/Landing Gear/Hydraulics/Electronics/Etc.) | 2, 970 |
| Propellant | 15, 240 |
| Total Weight = Escape Payload of SATURN II | 26, 750 |

2. Orbit-Launched Space Vehicle

Figure II-33 shows the orbit-launched lunar vehicle, as it would appear before leaving the orbit and Fig. II-34 illustrates the vehicle which would ultimately land on the moon. The 48, 000-pound payload shown in Fig. II-34 is a manned earth return vehicle. This is brought to the 96-minute orbit by a SATURN II vehicle, and is refueled from orbital payload packages.

The vehicle is a tandem three-stager, the first stage (high-energy) being utilized to escape from orbit. The second stage - also high-energy - provides for the lunar landing, and the third stage, a storable,

CONFIDENTIAL
UNCLASSIFIED

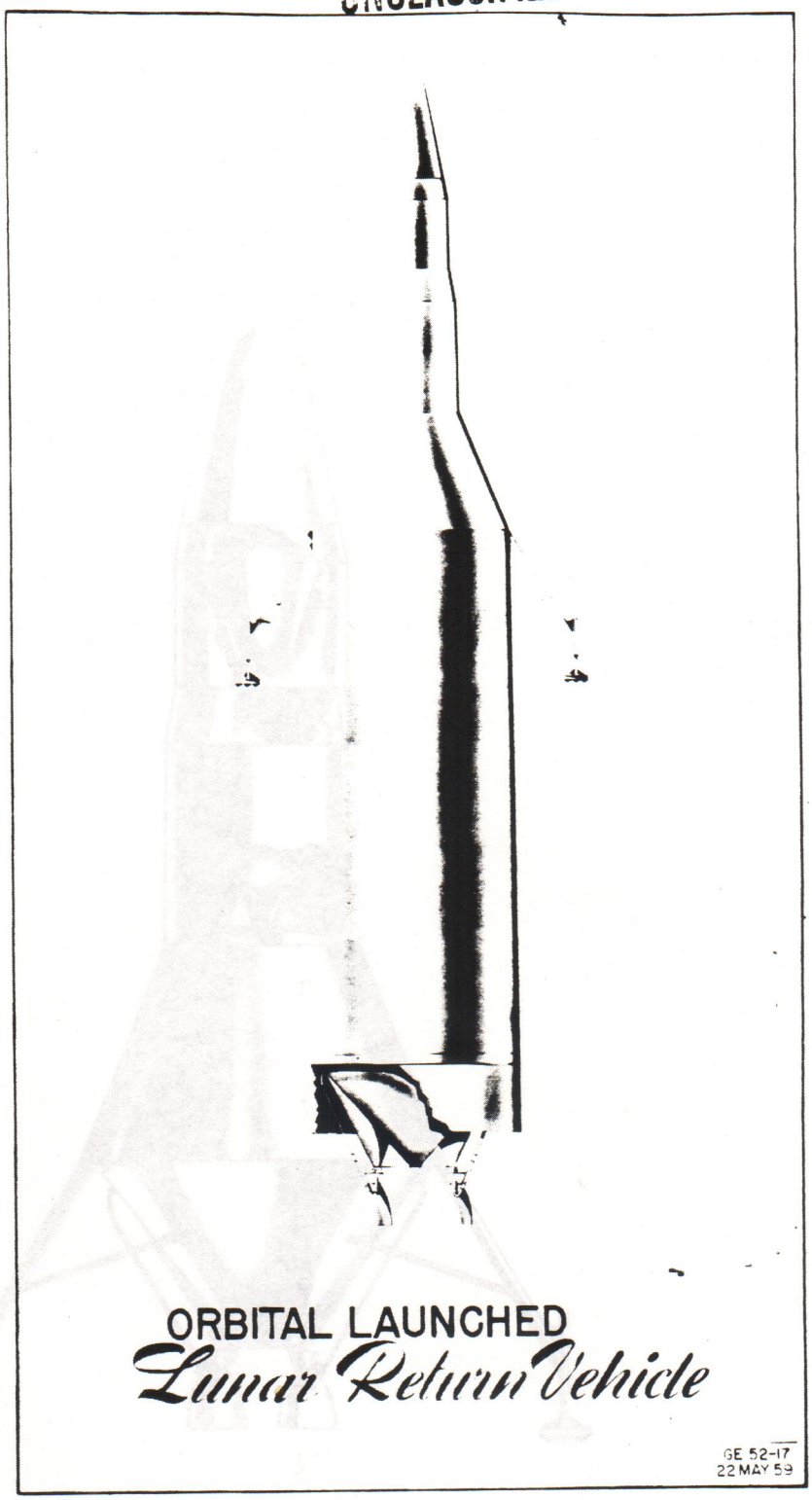


Fig. II-33. Orbit-Launched Lunar Vehicle



CONFIDENTIAL
UNCLASSIFIED

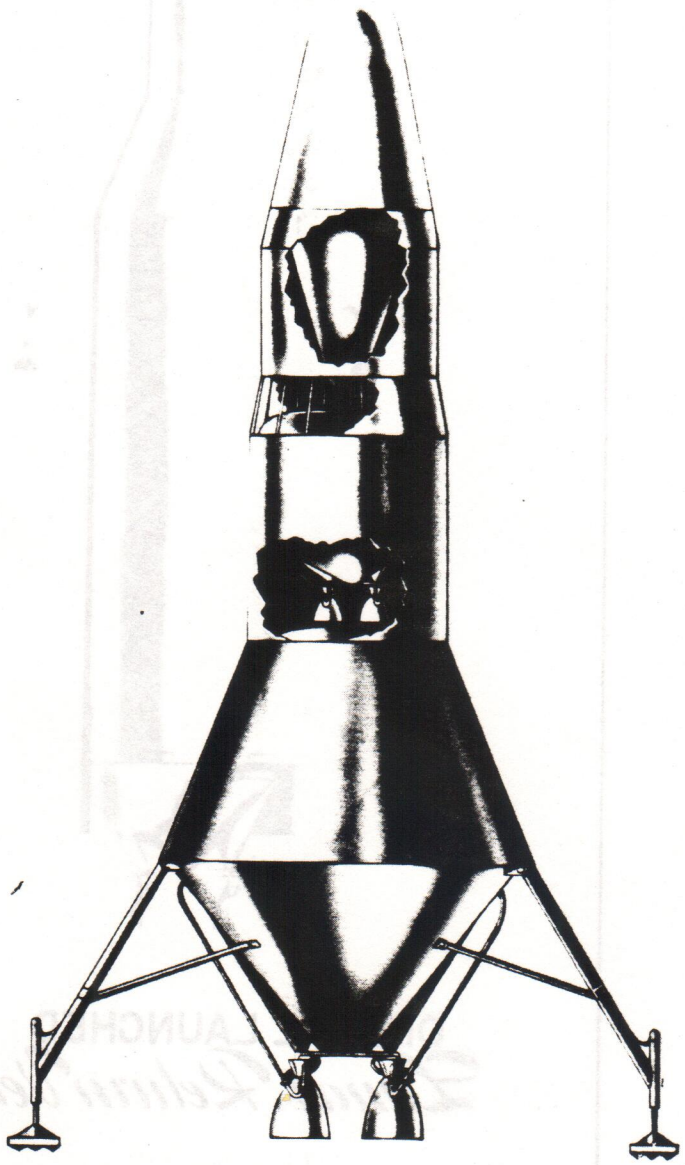

Fig. II-34. Lunar Landing Vehicle

liquid-propellant rocket vehicle, gives moon-to-earth return capability. A weight summary is given in Table II-12.

An attractive method of getting the orbit-launched vehicle to orbit is to utilize the first stage of the orbit-launched lunar vehicle in place of the third stage of the standard SATURN II transport vehicle. It is desirable from the performance point of view to use a third stage of the orbital-launched lunar vehicle twice, first as a third stage of SATURN II for transfer into orbit; then refuel it and use again for the departure maneuver from orbit. Since the unfueled lunar vehicle weighs 47,500 pounds, approximately 22,500 pounds of storable fuel can be carried directly into orbit in the final earth-return stage to make up the 70,000-pound payload capability of the SATURN II carrier vehicle.

Table II-12
WEIGHT SUMMARY OF ORBIT-LAUNCHED LUNAR VEHICLE

| | |
|---|---|
| Thrust to Leave Orbit, lb | 200,000 |
| Weight from Orbit, lb | 400,000 |
| Cutoff Weight, lb | 160,000 |
| Tankage, Engines, etc., lb | 20,000 |
| Ignition Weight, Lunar Landing, lb | 140,000 |
| Cutoff Weight, lb | 60,000 |
| Tankage and Engines, lb | 9,000 |
| Thrust, lb | 100,000 |
| Gross Payload, lb | 51,000 |
| G&C, lb | 3,000 |
| Active Payload Package, lb | 48,000 |

Therefore, per round trip,

$\frac{400,000}{30,000}$ = 13.3 successful SATURN I or

$\frac{400,000}{70,000}$ = 5.7 successful SATURN II vehicles are necessary.

This must be compared to the eight SATURN II's mentioned in paragraph III. B. 4.

Fueling of the lunar vehicle includes 240,000 pounds of $O_2/H_2$ for the first powered phase or orbital escape, 80,000 pounds of $O_2/H_2$ for the second powered phase or braking maneuver, and 10,000 pounds of storable fuel for the return mission which brings the orbital take-off weight to 400,000 pounds.

Alternately, the entire orbit-launched lunar vehicle could be brought into orbit by a standard SATURN II (utilizing its own third stage), fueling completed in orbit, then dispatched.

3. Orbital Return Vehicle

The vehicle for servicing an orbital station and/or platform will be a re-entry body containing a storable liquid-propellant engine which furnishes the required impulse for rendezvous (orbital maneuvering), and retro-kick for returning. The re-entry body would contain seats for returning men, instruments for communications and re-entry maneuvering, and survival equipment. It will be capable of housing a few men for short periods of time and so become a temporary satellite itself. For longer periods of time and with more men, additional housing must be provided, such as empty propellant containers fitted to serve as living quarters. Many of them could be arranged so as to provide ideal housing for a large space crew in orbit: a space platform.

The most promising re-entry scheme that can be operational in three to four years appears to be a ballistic re-entry using body-lift Although this scheme does not have the full maneuverability of a glide vehicle, it does have sufficient maneuverability to correct for re-entry dispersions. This will allow preselection of the landing site within the orbital plane, with a high degree of return accuracy. A return accuracy of a few miles is desirable for crew safety and reduction of ground crew strength required for routine recovery operations. In an emergency, of course, there would be little regard paid to the landing site location.

A typical orbital re-entry vehicle utilizing variable body-lift is shown in Fig. II-35. Normal capability of this vehicle is ten to 16 men. For transporting ten men, the vehicle could carry an additional 1700 pounds of cargo; and the men would have more space in the cabin. A crew of ten men has been recommended for orbital refueling of a manned-lunar-transport vehicle. The ten men would be housed in the re-entry vehicle and in an attached, converted

SECRET
CONFIDENTIAL
UNCLASSIFIED

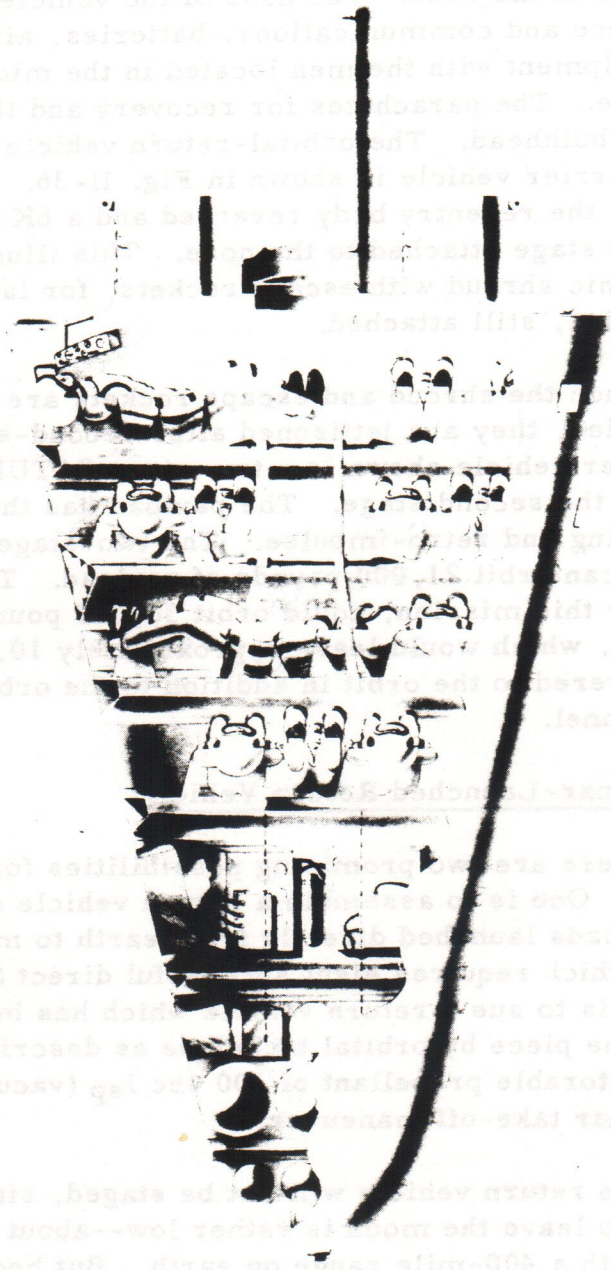

Fig. II-35. SATURN I Carrying Orbital Return Vehicle as a Payload



SECRET
CONFIDENTIAL
UNCLASSIFIED

propellant tank, which is referred to here as "minimum orbital station" and is discussed shortly in Chapter III. B. 9.

The orbital re-entry vehicle has a configuration similar to the JUPITER nose cone, and is controlled during re-entry by flaps attached to the base of the cone. The nose of the vehicle contains instruments for guidance and communications, batteries, air bottles, and other heavy equipment with the men located in the mid and aft sections of the vehicle. The parachutes for recovery and the airlock are located on the aft bulkhead. The orbital-return vehicle as payload of the orbital-carrier vehicle is shown in Fig. II-36. The return vehicle shown has the re-entry body reversed and a 6K JPL storable liquid-propellant stage attached to the nose. This illustration shows the aerodynamic shroud with escape rockets, for launch and ascent emergencies, still attached.

Since the shroud and escape rockets are used only for ascent emergencies, they are jettisoned after second-stage ignition is assured. The carrier vehicle shown is a two-stage SATURN I using the modified TITAN as the second stage. The payload has the 6K JPL engine for maneuvering and retro-impulse. The two-stage SATURN I vehicle with kick can orbit 21,000 pounds of payload. The three-stage version, if used for this mission, could orbit 30,000 pounds in a 307-nautical-mile orbit, which would leave approximately 10,000 pounds of cargo to be delivered to the orbit in addition to the orbital return vehicle and personnel.

4. Lunar-Launched Return Vehicle

There are two promising possibilities for return to earth from the moon. One is to assemble a return vehicle on the lunar surface from payloads launched directly from earth to moon with SATURN II vehicles which requires eight successful direct SATURN II flights. The other is to sue a return vehicle which has been brought to the moon in one piece by orbital technique as described earlier. In both cases, a storable propellant of 300 sec $I_{sp}$ (vacuum) has been assumed for the lunar take-off maneuver.

The return vehicle will not be staged, since the performance required to leave the moon is rather low--about equal to a ballistic missile with a 400-mile range on earth. But because of the vertical re-entry and aerodynamic braking phase during flight termination, ample propellants for midcourse correction will be carried (200 m/sec).

CONFIDENTIAL
UNCLASSIFIED

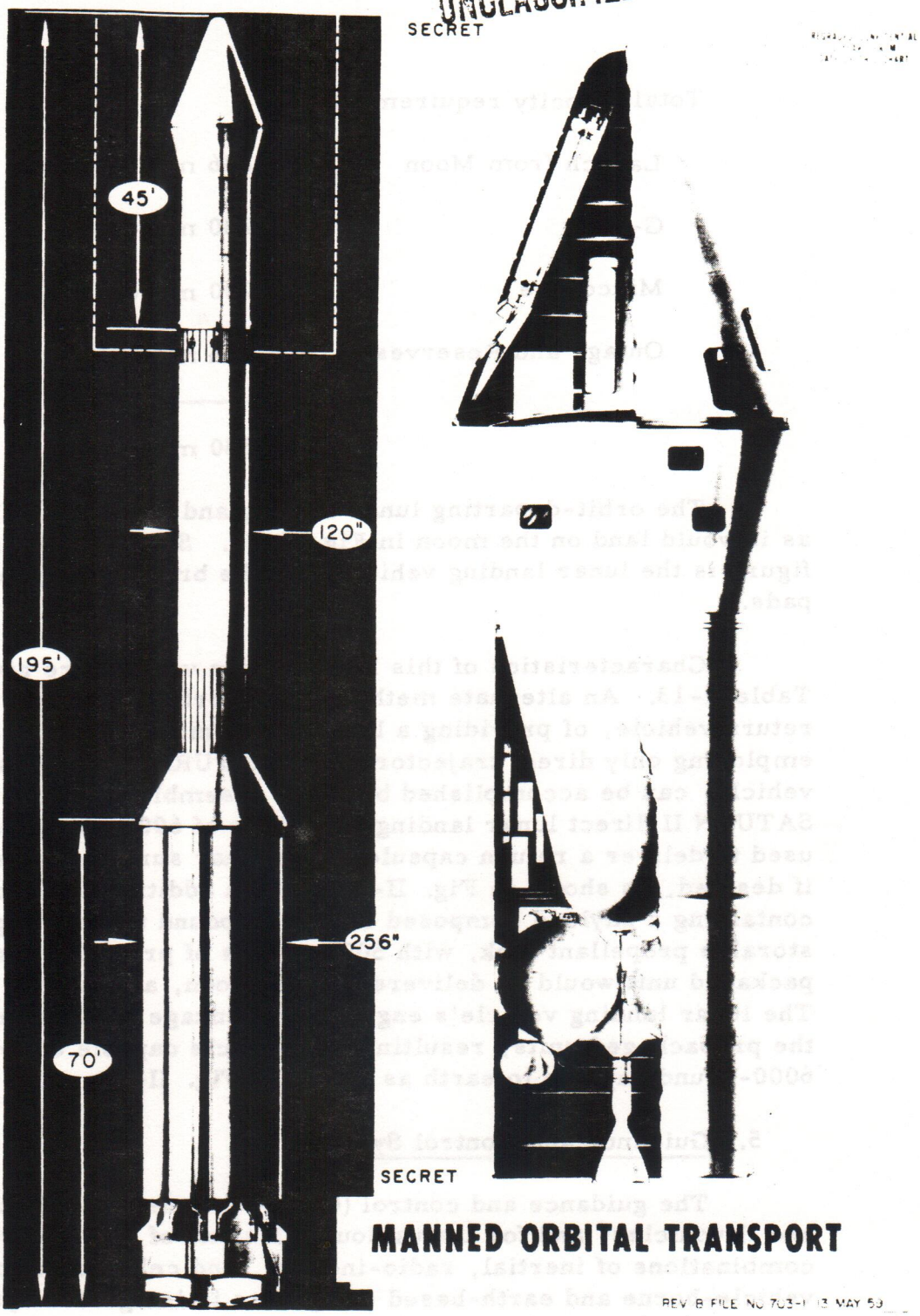


Fig. II-36. Lunar-Launched Return Vehicle



SECRET
CONFIDENTIAL
UNCLASSIFIED

Total velocity requirements:

| | |
|---|---|
| Launch from Moon | 2886 m/sec |
| G-Loss | 200 m/sec |
| Midcourse | 200 m/sec |
| Outage and Reserves | 244 m/sec |
| | 3530 m/sec |

The orbit-departing lunar landing and return vehicle is shown as it would land on the moon in Fig. II-37. Shown in the inset of this figure is the lunar landing vehicle with the braking stage and landing pads.

Characteristics of this lunar return vehicle are given in Table II-13. An alternate method, to the orbit-launched lunar landing return vehicle, of providing a lunar-earth manned return capability employing only direct trajectories for SATURN II as a basic carrier vehicle, can be accomplished by lunar assembly as follows. The SATURN II direct lunar landing capability of 6000 pounds would be used to deliver a return capsule to the lunar surface, with personnel if desired, as shown in Fig. II-38. Seven additional flights, each containing a payload composed of a 6000-pound thrust, engine and storable propellant tank, with 5000 pounds of propellant, as a prepackaged unit would be delivered to the moon, as given in Table II-13. The lunar landing vehicle's engines and tankage would be replaced by the prepackaged units, resulting in a vehicle capable of returning the 6000-pound capsule to earth as shown in Fig. II-39.

5. Guidance and Control System

The guidance and control (G&C) systems used for the SATURN I and II vehicles, and for the various missions of this program, are combinations of inertial, radio-inertial, and celestial-inertial, using vehicle-borne and earth-based computers in integrated systems. For several phases of the various missions, the guidance system will initially rely upon a radio communications system (see Chapter IV) capable of transmitting data from the vehicle to an earth control center, and commands from the control center to the vehicle. Ultimately, a

SECRET
CONFIDENTIAL
UNCLASSIFIED




# LUNAR·EARTH
## Return Vehicle

REV A
GE 52-8-59
9 MAY 59

Fig. II-37. Lunar-Launched Return Vehicle



SECRET
CONFIDENTIAL
UNCLASSIFIED

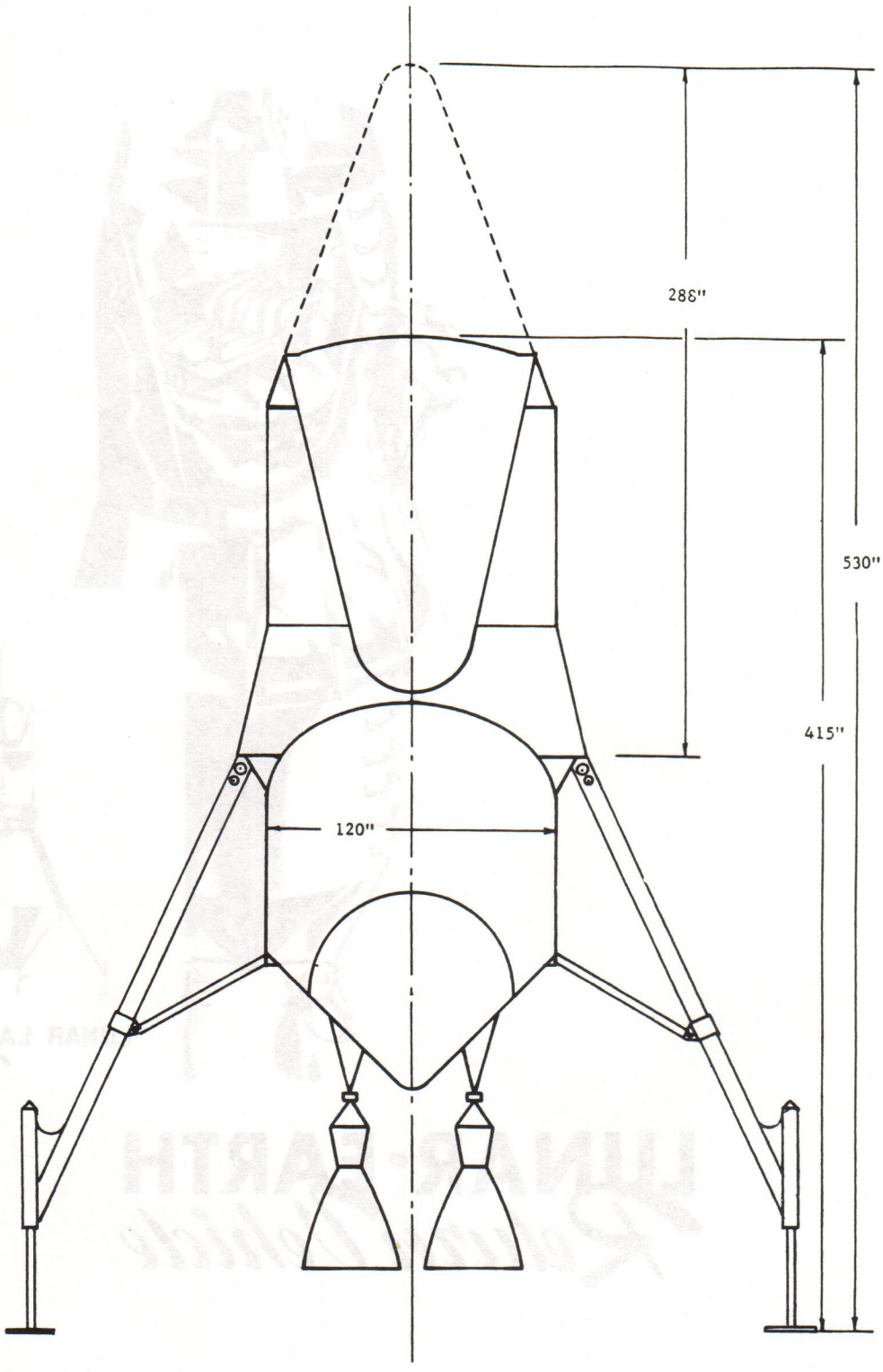


Fig. II-38. SATURN II Direct Lunar Landing Vehicle (Manned Capsule)

CONFIDENTIAL
SECRET
UNCLASSIFIED

Table II-13
WEIGHT SUMMARY OF LUNAR-EARTH RETURN VEHICLES

| | |
|---|---|
| Manned Capsule: | 8,000 lb |
| Cargo Capsule: | |
| Thrust, one engine | 6,000 lb |
| Engine Weight | 420 lb |
| Propellant Weight | 5,000 lb |
| Structure, etc., Weight | 580 lb |
| | 6,000 lb |
| Combination of: | |
| 1 Manned Capsule | |
| 7 Cargo Capsules give | |
| Launch Weight | 50,000 lb |
| Cutoff Weight | 15,000 lb |
| Orbit Departing Lunar Return Vehicle | |
| Manned Capsule | 8,000 lb |
| Thrust | 40,000 lb |
| Launch Weight | 46,500 lb |
| Cutoff Weight | 14,000 lb |

system will be developed, in which the earth-based general purpose computer (GPC) is replaced by a vehicle-borne digital universal guidance computer with input and output adapters tailored to the specific mission. As far as G&C is concerned, the system would then be independent of a communications link to earth.

The G&C system will be designed for automatic operation, without need for human intervention during the flight. This feature is essential, because the majority of the flights will be unmanned; and the equipment also must continue to function with a disabled crew aboard. For manned flights, however, some displays and over-riding manual controls will be made available, in order to obtain improved reliability.

The control of the motions of the vehicle about the center of gravity during the powered phase of flight would be based upon



CONFIDENTIAL
SECRET
UNCLASSIFIED

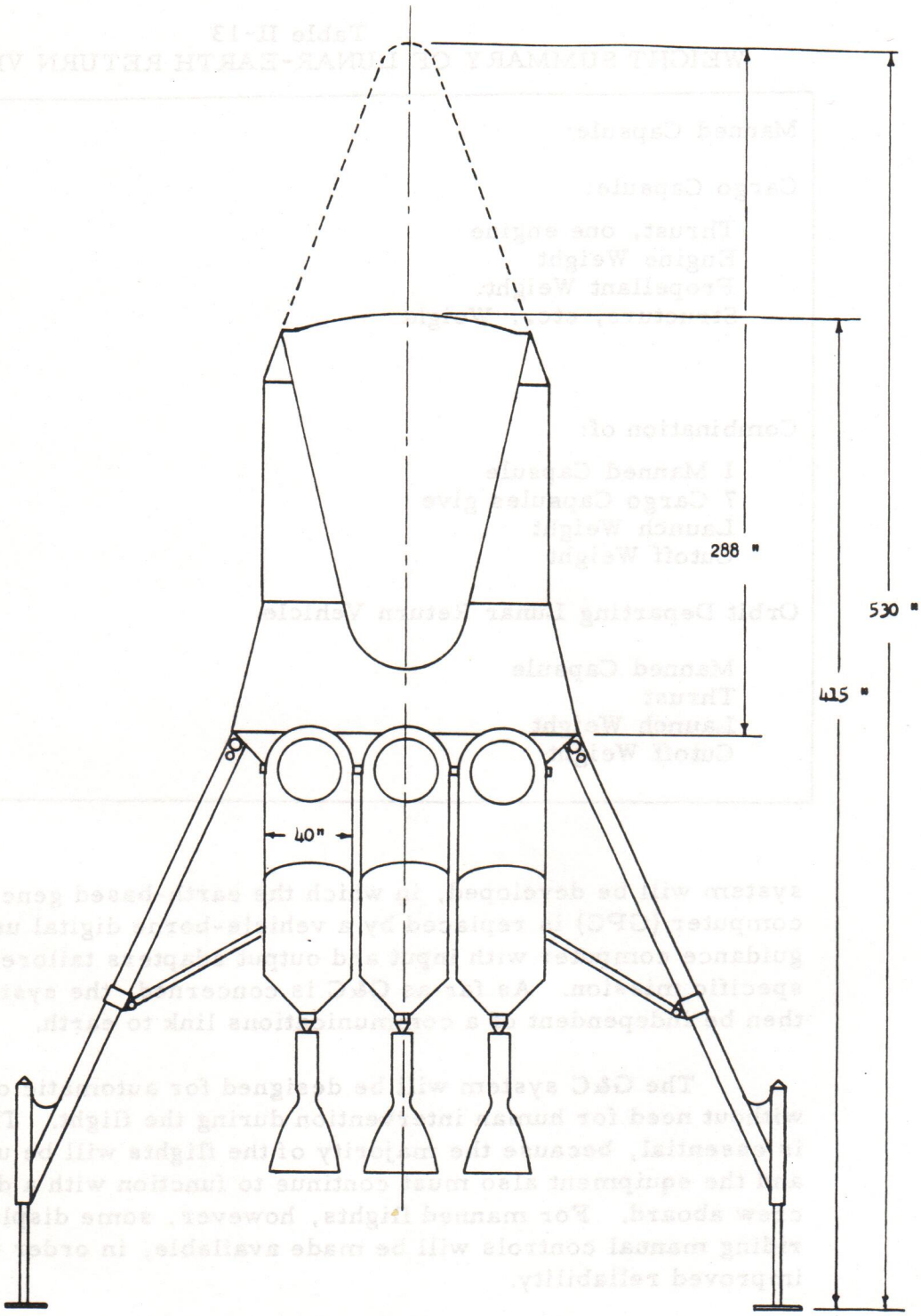


Fig. II-39. Lunar-Assembled Earth Return Vehicle

CONFIDENTIAL
SECRET
UNCLASSIFIED

intelligence furnished by the G&C equipment in the payload or upper stage and possibly additional equipment located in the boosters.

For the design of the G&C equipment, the assumption will be made that the following prerequisites are available:

(a) A common time standard.

(b) A global communications system, such as the 24-hour satellite communications system, providing communications between the vehicles and the earth-based control center (see Chapter IV).

(c) An earth-based control center, with at least one GPC that can be programmed according to the requirements of the various phases of flight.

(d) Earth-based tracking stations, suitably arranged and synchronized (see Chapter IV).

(e) Variable settings for azimuth, pitch program, and power cutoff in the vehicle and ground support equipment.

(f) Ephemeris of the earth-satellite in the transfer orbit.

(g) Homing beacon or transponder in the earth-satellite in the transfer orbit.

(h) Transponders on the moon in known locations relative to the selected landing site.

With these assumptions, the main features of the proposed G&C systems may be summarized Table II-14. It is seen that the G&C operations generally can be broken down into the preflight, injection, midcourse, and terminal phases. During the preflight phase, the precomputed guidance values (azimuth, pitch-program, cutoff velocity) are played into the guidance equipment; the laying operations to line up the inertial platform are performed; and the star-trackers are preset for proper acquisition of their targets (for moon, planets, sun and/or other stars). The injection phase begins at lift-off. The cutoff equation will be solved for the individual trajectory being flown either by vehicle-borne equipment (inertial guidance computer) and/or by radio-inertial means and the earth-based GPC. An active midcourse phase must be employed to correct for injection errors, if the resulting accuracy of the injection



UNCLASSIFIED
SECRET
CONFIDENTIAL

TABLE II-14
MAIN FEATURES OF GUIDANCE AND CONTROL SYSTEM

| Mission | Phase of Flight: Preflight | Injection | Midcourse | Terminal |
|---|---|---|---|---|
| Earth Surface to Lunar Surface; Soft Spot-Landing | Computation of Guidance Values (E)<br>Laying (V, E)<br>Preset Guidance Values (V)<br>Preset Star-Trackers (V) for Acquisition of Targets | Radio-inertial (E, V)<br>Inertial (V, B) | Position from star-trackers, attitude and time (V)<br>Radio Tracking (E, V, B)<br>Computation of Correction Maneuvers (E)<br>Inertial Supervision of Correction Maneuvers (V)<br>Smoothing Data (E) from Star Trackers (V), Radio Tracking (E)<br>Nose or Tail Towards Sun in Free-Flight (V) | Proportional Navigation Based on Line of Sight and Distance<br>Beacon (V) Transponder (M) Give Position and Velocity Relative to Lunar Landing Site<br>Beacon Resolver (V) Gives Lateral Velocity and Angular Velocity of Line of Sight<br>Inertial Supervision of Braking (V)<br>Braking Computer (V)<br>Map Matching and/or TV (A) |
| Earth Satellite to Lunar Surface; Soft Spot-Landing | Computations (E)<br>Orbit Fixed "Laying" (V, E)<br>Preset Guidance Values (V)<br>Preset Star-Trackers (V) for Acquisition of Targets | Inertial (V)<br>Radio-inertial (E, V, B) | Same as above | Same as above |
| Lunar Surface to Earth Surface; Re-entry with Lift and Aerodynamic Braking | Computations (E)<br>Laying (V, M)<br>Preset Guidance Values (V)<br>Preset Star-Trackers (V) for Acquisition of Targets | Inertial (V) | Essentially as above<br>Radio Tracking (E) After Final Acquisition<br>Celestial-Inertial (V, B) | Tracking (E)<br>Angle of Attack and Skin Temperature - Meters (V)<br>Accelerometers (V)<br>Lift and Braking Computer (V)<br>Deployment of Parachute (V)<br>Recovery Beacon (V) |
| Earth Surface to Rendezvous with Earth Satellite | Computations (E)<br>Laying (V, E)<br>Preset Guidance Values (V) | Inertial (V)<br>Radio-inertial (E, V, A) | Radio Tracking (E, A)<br>Earth Assisted Corrections (A) | Proportional Navigation Based on Angular Velocity of Line of Sight and Distance<br>Beacon (V) Transponder (S) Give Position and Velocity Relative to Satellite<br>Inertial Supervision of Approach (V)<br>Approach Computer (V) |
| Re-entry from Earth Satellite Orbit; with Lift and Aero-Dynamic Braking | Computations (E)<br>Orbit Fixed "Laying" (V, E)<br>Preset Guidance Values (V) | Inertial (V) Cut-off of Braking Rocket | Radio Tracking (E, A)<br>Earth Assisted Corrections (A) | Tracking (E)<br>Angle of Attack and Skin Temperature Meters (V)<br>Accelerometers (V)<br>Lift and Braking Computer (V)<br>Deployment of Parachute (V)<br>Recovery Beacon (V) |

NOTES: (A) Alternative, under consideration. (B) Back-up equipment.
(E) Earth-Based equipment. (M) Moon-based equipment.
(S) Satellite-borne. (V) Vehicle-borne.
The guidance values are azimuth correction, pitch program, cut-off velocity as functions of time.

CONFIDENTIAL

CONFIDENTIAL

~~CONFIDENTIAL~~
~~SECRET~~
UNCLASSIFIED

phase is not sufficient to give acceptable tolerances for the beginning of the terminal phase. For the longer flights in earth-moon space, this midcourse correction could be based upon position and velocity information derived from the three star-trackers aboard the vehicle. This will eventually lead to a guidance system that is independent of vehicle-earth-vehicle communications. Initially, however, radio-tracking and ground computations will be used extensively so that vehicle-earth-vehicle communications are essential for this guidance phase.

During the terminal phase, the guidance will be "target-oriented." For example, during the powered terminal maneuver in-flights to orbital rendezvous and to the lunar landing site, line-of-sight information (rotational velocity of the line-of-sight and distance) will be used to steer a type of proportional navigation course, with essentially zero differential velocity between vehicle and target at the end of terminal phase. The G&C requirements for manned re-entry flights with satellite velocity, and particularly with escape velocity for earth recovery in preselected areas, will require further development work. It is expected that some information and experience on this problem will be obtained from other programs in the near future.

6. Guidance and Control System Availability

A typical block diagram of the proposed G&C system is given in Fig. II-40. This system relies on components that are either readily available or in the development stage. Only a little fundamental research will be required; the development effort will consist mainly of modifying, adapting, packaging of components into the proposed instruments, and integrating these into the complete system. In the following, a few of the more important components are given that would require development work of the type indicated.

a. Star-Tracker, Lateral Photocell

The star-tracker and lateral photocell will be an optical system that employs a semi-conductor photocell as a sensor. If the image of the star (in the general sense) is not centered on the surface of the photocell, an error signal is generated in two (lateral) coordinates (X, Y). The error signal is fed into two servo drives which keep the image of the star centered on the cell. The angles resulting from this servo operation are relayed to the computer via two digital readout encoders. Three star-trackers of this type will be mounted on the vehicle.

UNCLASSIFIED
~~CONFIDENTIAL~~
~~SECRET~~

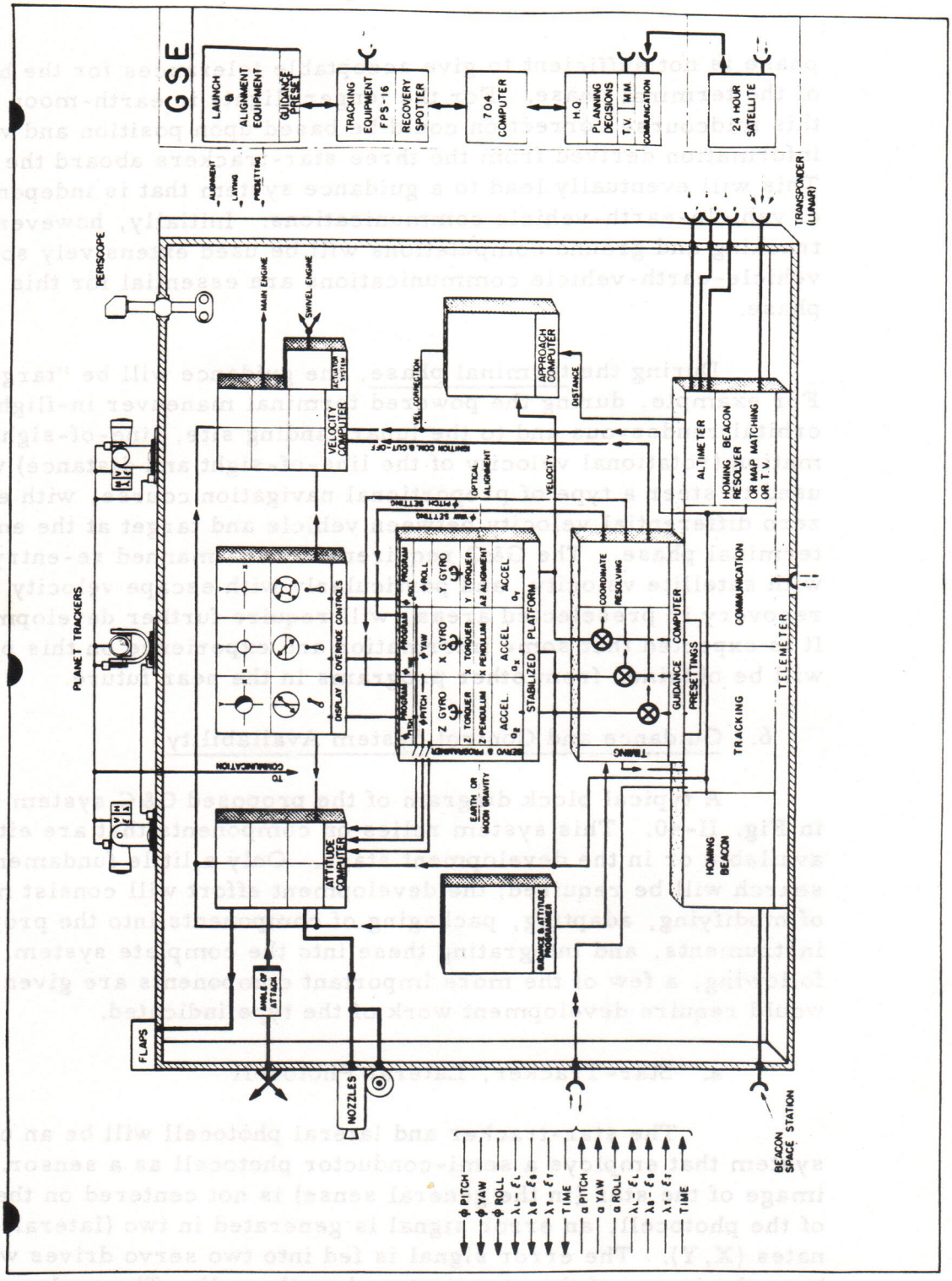


Fig. II-40. Block Diagram of a Typical Guidance and Control System

SECRET
CONFIDENTIAL
UNCLASSIFIED

b. Velocity and Attitude Control Computer

By means of various inputs, the velocity and attitude control computer system will compute and send required signals for the attitude control. It will also provide a velocity computer section to initiate ignition, swivel, thrust control, and thrust termination of the engines. Main development problems include the design of digital computer and servo response.

c. Guidance and Approach Computer

Using various inputs, the guidance and approach computer system will compute and send signals to the velocity and attitude control computer. Also, it will evaluate accelerations in lateral directions in order to determine the necessary correction maneuvers. During approaches, it will reduce velocity and distance to zero simultaneously. Main development problems include advanced digital computer and servo loop design.

d. Guidance and Attitude Programmer

The guidance and attitude programmer system will store precomputed G&C information to attain optimum solutions for the various phases of a flight. Thus a "close-to-precomputed trajectory" may be obtained, in contrast to a Q-matrix system. The main development problems include design of the memory devices and miniaturization.

e. Stabilized Platform

This stabilized platform system will consist of a complete three-axis stabilized platform with full freedom and redundant program axis in each coordinate, three high-precision airbearing gyros, three high-precision accelerometers, three leveling devices, and a recirculating air system. It will maintain a spatial reference during the entire flight, and it will furnish signals to the computers for attitude control and guidance. The main development program is packaging.

f. Attitude Control

The attitude control system will execute control maneuvers by means of a hydraulic pump actuator system steering swivel engines (for large disturbances), or by means of four pairs of air nozzles



UNCLASSIFIED
SECRET
CONFIDENTIAL

providing proportional control of 0 to 30 pounds of thrust per axis (for small disturbances). The system will be located in the forward section of the vehicle to serve all phases of flight with one system. Main development problems include adaptation and packaging of currently available systems.

g. Beacon Resolver

As part of the overall tracking system, this beacon resolver will receive signals and resolve angles from transponders on the rendezvous satellite or on the lunar surface. It will determine position and possibly velocity of the vehicle relative to the transponders and will feed this information into the guidance and control computers.

h. Map Matcher

A map matcher would assist or replace the beacon resolver. The instrument would compare pictures on the principle of area matching, its outputs being fed to the guidance and control computers during approach. It could work on a continuous or intermittent basis. It appears to be possible to build some logic into the map matcher. Extensive development work will be necessary, particularly for the sensor designs, which must be suitable for approach to the bright and dark lunar surface.

i. Television

A TV system could be used as a replacement or to assist the beacon resolver, or the automatic map matcher. This equipment would transmit a picture back to the earth-based control center, where corrective maneuvers or the decision for landing could be supervised and/or intitated. Development problems include near real-time transmission of pictorial data to a control center (possibly on the other side of the earth, involving a high power broad-band communications link), and provision of a larger power supply system aboard the vehicle and/or a directional antenna aboard the vehicle (to track the earth). Solutions to these problems are known to be costly. The possibility of hovering close above the lunar surface lessens the magnitude of these problems somewhat.

CONFIDENTIAL
UNCLASSIFIED

7. System Improvements and Vehicle Optimization

In establishing the initial payload capabilities for the orbital and escape missions for SATURN I and II, it was felt that values used should be conservative and guaranteeable and that they should represent "effective payload." In other words, these figures do not include any instrumentation or payload container weights, nor do they represent an "on-the-ground" type of total weight figure. They include, however, a crew and their personal equipment, if applicable. For this reason, the values of payloads of approximately 30,000 pounds and 70,000 pounds for orbital capability of SATURN I and II and of 27,000 pounds for SATURN II escape are used. A complete vehicle optimization study is expected to result in increased payload capabilities.

In addition to the above noted performance increases, due primarily to shifting of propellants and staging, it appears that further performance increases will be realized through the use of high strength-to-weight ratio materials, re-use of components, state-of-the-art development improvements in components, and in a lengthening of the 51-hour earth-to-moon trajectory to approximately 60 hours. Preliminary calculations indicate that the soft landing capability of SATURN II is increased approximately 20 percent by lengthening the trajectory time a like percentage of time.

Thus, a high probability exists that a minimum performance improvement of 20 percent or more might be realized in the final design of both the SATURN I and SATURN II vehicles, which in turn reflect greater overall safety and reliability.

8. Manned Payloads

Transportation to the lunar outpost will require two basic manned capsules. These capsules, with suitable modifications for special conditions, will serve as round trip transporters for orbital crews and to transport the outpost personnel to the moon's surface via orbit and return to the earth's surface. Configurations of both manned capsules proposed here are based on the proven JUPITER nose cone configuration technology. However, it is understood that between the present time and the inception of final capsule design, full exploitation will be made of the latest state-of-the-art advancements in vehicle re-entry and recovery designs.


UNCLASSIFIED
CONFIDENTIAL

Two ways of mounting the capsule on top of the vehicle were studied, forward and rearward. Of these, the reversed cone with trailing edge aerodynamic control surfaces appears most promising for transporting personnel to and from the orbital station. As discussed in Chapter III. B. 3, this capsule can also serve as one of the basic elements of the minimum orbital station. The reverse position offers the maximum amount of crew protection and safety in the event of pre-launch or early lift-off vehicle failure. Aerodynamic control surfaces are provided to permit the use of body lift during the re-entry portion of flight to lower the maximum decelerations encountered. In addition, such lift would provide a maneuverability range approaching plus or minus 1500 miles on the earth's surface.

The interior of the capsule is arranged to allow for the transporting of ten to 16 men into orbit and return. Living space is limited to that needed during the ascent and descent portion of the flight. On the orbital station, additional volume will be provided for living quarters. An airlock, jettisonable during re-entry, is provided at the rear of the capsule for entrance and egress. (Details in Fig. II-35.)

Adequate volume for life support essentials has been provided based on a consumption rate of approximately 450 pounds/man/month. These essentials are distributed both within the capsule for short-term use and emergency, and in the attached vehicle payload container for extended orbital storage. Terminal orbital recovery equipment is located within containers attached to the rear surface of the capsule.

The capsule to transport men to the moon's surface via the orbital station and return to the earth's surface is shown in Fig. II-37 as part of a lunar landing vehicle. Capsule configuration is based on the JUPITER nose cone shape, as is the ten-man orbital return capsule, but has additional ablation material for protection during parabolic re-entry. Again the reverse cone position offers the greatest crew protection and safety during landing and pre-launch operations and at lift-off. Designed for the initial transport of two men, the capsule during later missions will include provisions for three men and eventually four men. The space available for movement within the capsule becomes smaller as a greater number of men are carried; but this is physiologically acceptable during the 51- to 60-hour flight period.

Full environmental control is provided, maintaining approximately one atmosphere pressure with oxygen and an inert gas.

Temperature and humidity will be balanced and maintained within tolerable limits. Electronic equipment is provided for navigation, voice communications, telemetry, and tracking beacons.

For the second manned lunar flight scheduled in July 1965, the ten-man capsule described above will be used providing transportation for nine men to the lunar surface. Upon arrival on the lunar surface, this capsule will not have the capability of immediate return. However, pre-packaged booster engines may be included in the regular unmanned supply vehicles to permit buildup of a complete earth-return vehicle. By this method, and by utilizing the emergency 16-man return capacity of the capsule, a capability is provided to permit the return of all lunar-located personnel at one time in an emergency.

9. Cargo Payloads

a. SATURN I Vehicle

Cargo payload to be carried into orbit by the SATURN I vehicles will consist primarily of propellants for orbital fueling of the manned lunar vehicle. Tankage for such a cargo vehicle, illustrated in Fig. II-41, is based on an extension of the 120-inch diameter for the SATURN I upper stages. Based on the oxidizer/fuel ratio of 5.1, the tanks will contain approximately 4750 pounds of liquid hydrogen and 27,750 pounds of liquid oxygen, which is close to a standard CENTAUR tank capacity.

b. SATURN II Vehicle

Two typical cargo compartments are shown in Figs. II-42 and II-32 for the direct earth-to-moon missions with SATURN II. The first of these is shown with a storable-propellant tank and engine of 6000 pounds which is needed for the lunar-assembled return vehicle which was shown in Fig. II-39. The second figure (Fig. II-32) depicts the standard 20-foot-long lunar outpost compartment as payload on the direct flight. Either of these, as well as other, typical configurations might be used.

Similarly, the orbital cargo payload for the SATURN II vehicle will be primarily propellants for fueling with some miscellaneous cargo. For the fueling operations, the tankage will be generally similar to that provided in the lunar landing vehicle for the

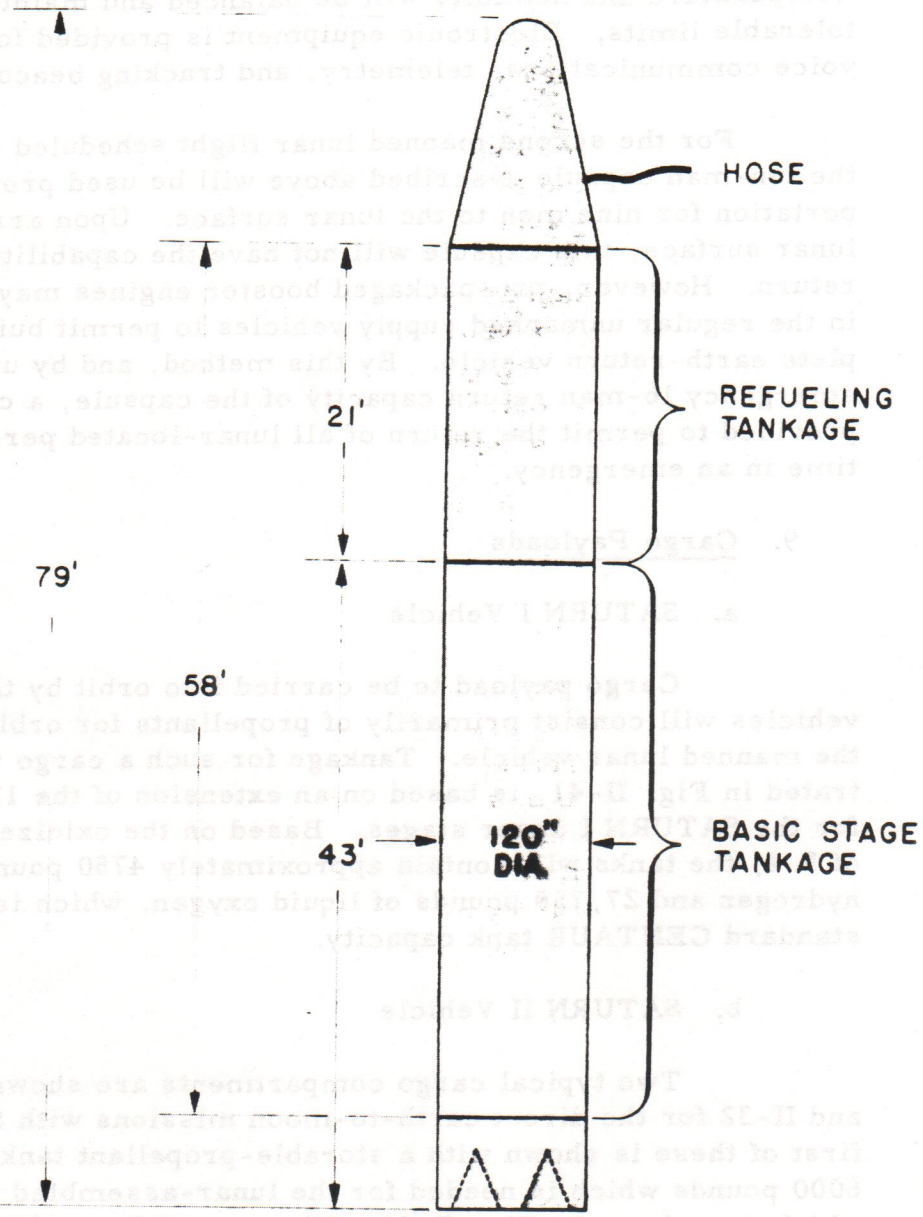


Fig. II-41. Dimensions of Typical Tanker Payload (SATURN I)

CONFIDENTIAL
SECRET
UNCLASSIFIED

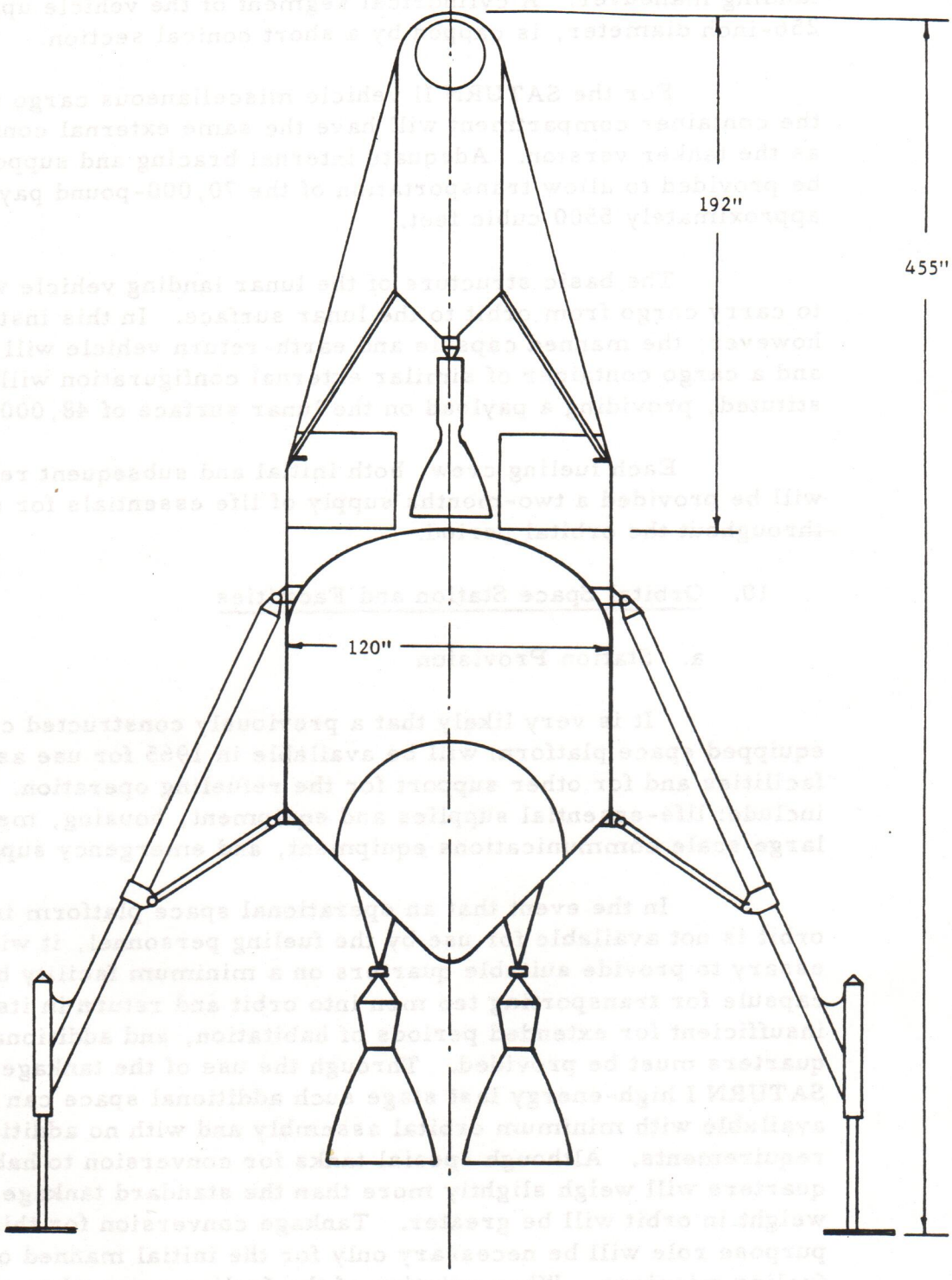


Fig. II-42 Lunar Landing Vehicle with 6,000-Pound Propulsion Unit as a Payload

UNCLASSIFIED
CONFIDENTIAL
SECRET

landing maneuver. A cylindrical segment of the vehicle upper stage, 256-inch diameter, is capped by a short conical section.

For the SATURN II vehicle miscellaneous cargo version, the container compartment will have the same external configuration as the tanker version. Adequate internal bracing and support will be provided to allow transportation of the 70,000-pound payload in approximately 5500 cubic feet.

The basic structure of the lunar landing vehicle will be used to carry cargo from orbit to the lunar surface. In this instance, however, the manned capsule and earth-return vehicle will be removed and a cargo container of similar external configuration will be substituted, providing a payload on the lunar surface of 48,000 pounds.

Each fueling crew, both initial and subsequent replacements, will be provided a two-months supply of life essentials for sustenance throughout the orbital period.

10. Orbital Space Station and Facilities

a. Station Provision

It is very likely that a previously constructed completely equipped space platform will be available in 1965 for use as housing facilities and for other support for the refueling operation. This could include: life-essential supplies and equipment, housing, medical care, large scale communications equipment, and emergency supplies.

In the event that an operational space platform in a suitable orbit is not available for use by the fueling personnel, it will be necessary to provide suitable quarters on a minimum facility basis. The capsule for transporting ten men into orbit and return in itself is insufficient for extended periods of habitation, and additional living quarters must be provided. Through the use of the tankage of the SATURN I high-energy last stage such additional space can be made available with minimum orbital assembly and with no additional vehicle requirements. Although special tanks for conversion to habitable quarters will weigh slightly more than the standard tankage, the useful weight in orbit will be greater. Tankage conversion for this dual purpose role will be necessary only for the initial manned orbital fueling missions. When rotation of the fueling crew takes place, the arriving crew and capsule will utilize the same tank converted quarters.

In the construction of the minimum orbital station, the manned orbital capsule illustrated in Fig. II-35 with attached re-entry propulsion system is detached from the last stage booster in orbit. By turning this capsule around, the capsule airlock will be oriented toward the booster payload section and upper part of the booster tankage. A continuation of the airlock to provide both entrance into the vehicle from the capsule and entrance from the outside is attached to the payload compartment. Once the reoriented capsule is connected to the payload compartment and the tanks purged of residual propellants, equipment is moved from the payload compartment into the tanks. Communications and power monitoring will take place at the instrument consoles in the return capsule. The remaining interior activities will occur within the inhabited tankage/payload compartment. As additional vehicles arrive, the empty tanks will be attached to the exterior of the inhabited station to form both meteoroid protection and radiation shielding; in addition, to providing exterior storage and minimizing the effect of perturbing forces on the station from personnel movement and equipment operation.

As time permits, the empty propellant tanks may be assembled into a space platform. A typical configuration of 22 sets of tanks is shown in Fig. II-43.

For those missions in which miscellaneous cargo is carried into orbit, the payload container will have the same external configuration as the propellant container. Provisions will be made within the payload container to support and secure the cargo, and pressurized volume will be provided as necessary. The payload container including conical nose will inclose approximately 2000 cubic feet with a capacity up to 30,000 pounds.

b. Fueling Operations

The major items of equipment necessary for propellant transfer in orbit are manifolds for interconnecting tankage, meters for fuels and oxidizers, and transfer hose with valving and disconnects. Figure II-44 illustrates a simplified method of orbital refueling. Connection is made to the lunar vehicle through a flow meter and disconnect valve. In this method, the fuel tanks are individually fastened to the lunar vehicle and fuel is transferred from one tank at a time.

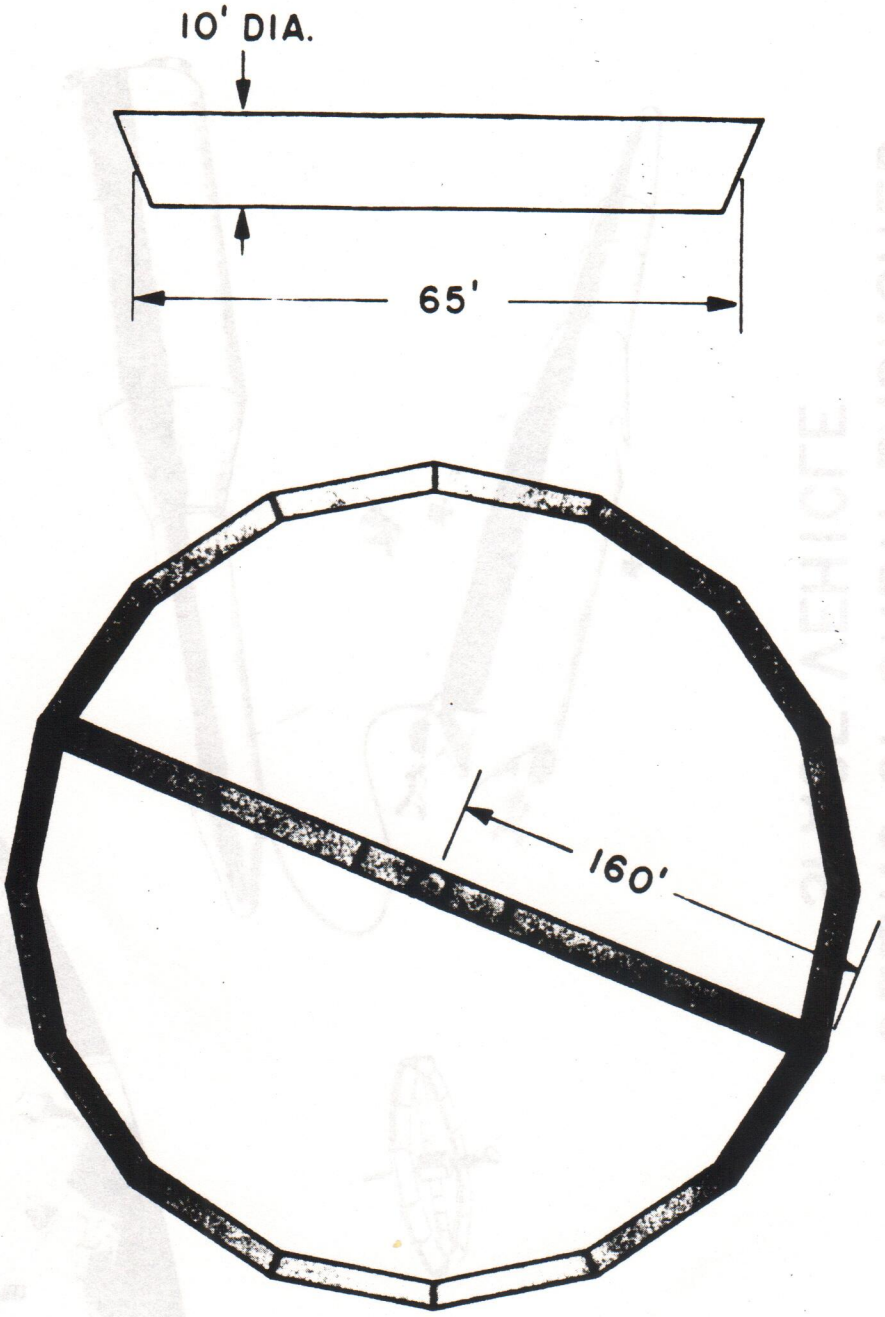


Fig. II-43. Typical Space Platform Assembled from Empty Containers

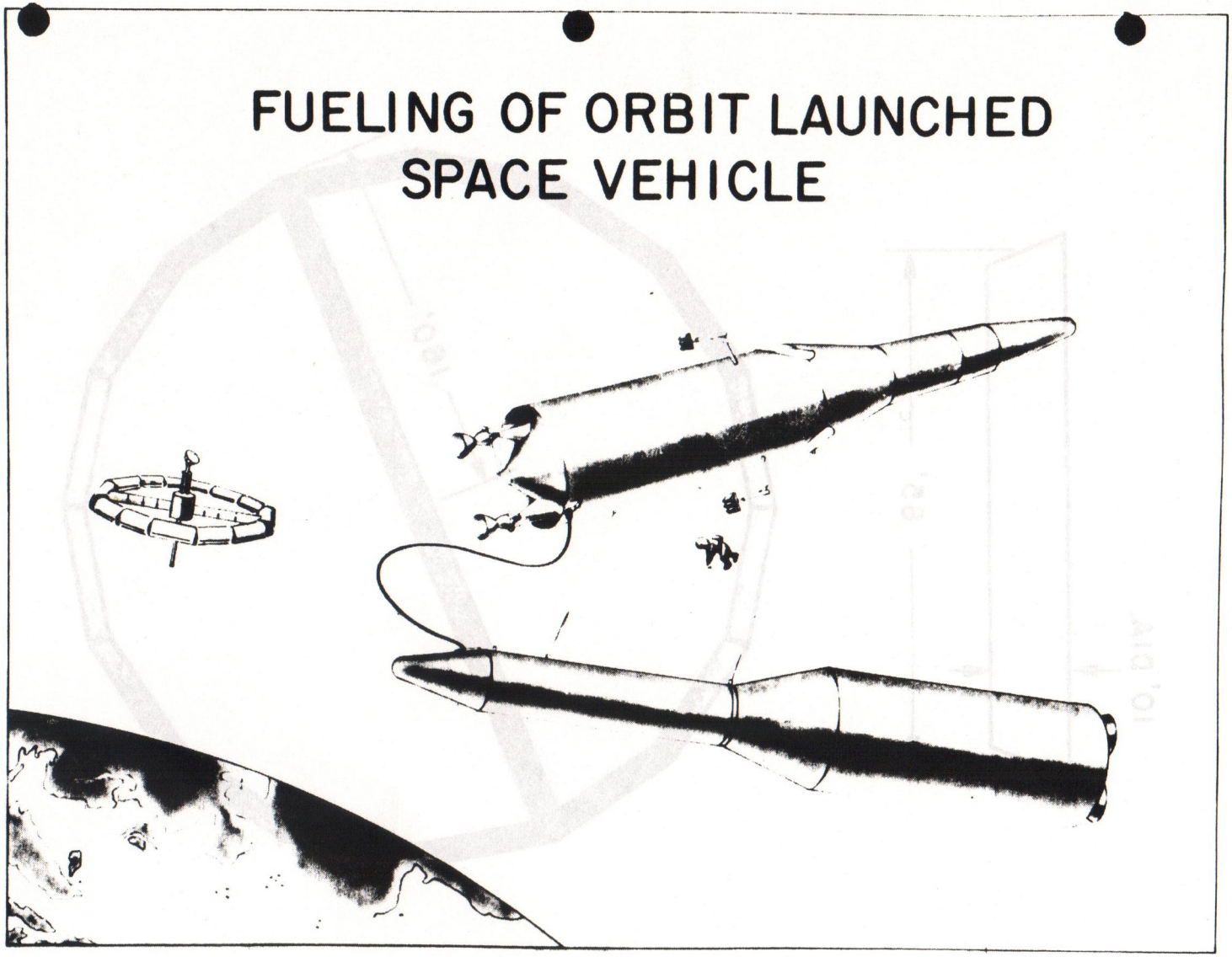


Fig. II-44. Refueling of Orbit-Launched Space Vehicle



CONFIDENTIAL

SECRET
CONFIDENTIAL
UNCLASSIFIED

Checkout equipment for the orbital operation will be similar to that required at the lunar outpost; however, the weight limitations are less critical. A preliminary estimate resulted in a weight requirement of approximately 12,000 pounds occupying 600 cubic feet which would allow for a complete set plus an equivalent weight for a spare set.

11. Transportation System Growth Potential

Further growth potential (beyond SATURN II) for the transportation system depends upon many items. The development of larger vehicles, more advanced propulsion systems, such as electric or nuclear, and improvements in materials and propellants are among the items which would contribute to improved growth potential figures.

Of the numerous possible methods of obtaining larger payload capabilities, three representative examples have been selected as follows: (1) the development of nuclear upper stages, or (2) the development of a large chemical propellant vehicle, such as a booster with a cluster of eight F-1 engines with a lift-off thrust of 12,000,000 pounds, and (3) the development of a space ferry based on ion propulsion which looks very promising, but only for cargo transportation because of the long transfer time in excess of 100 days.

Other improvements, not major but significant, can be achieved in materials and propellants, and in vehicle optimization. Vehicle optimization is discussed in paragraph B-6 above. In the area of materials improvement, it appears that titanium and beryllium may provide substantial improvements in vehicle performance where these high strength-to-weight materials are used extensively in the upper stages of the lunar vehicle and in the return vehicle. New plastics may provide weight reductions in the ablation material required for drag type orbital-return and lunar-return vehicles. Other uses for plastics might include flexible fuel tanks, structural members, and radiation protection.

If it is proven that the fuel-storage potentials of the lunar environment are as good as expected, it will be possible to use high-energy propellants to power the earth-return vehicles; and significant overall improvements will then be realized.

Reductions in payload requirements may result from the use of lunar resources, but this area can be explored only in the latter



UNCLASSIFIED
CONFIDENTIAL

phases of the program. If the need arises for a much larger vehicle based only on chemical propellants in the payload class of 500,000 pounds for a 96-minute orbit, then such a booster could be based on a cluster of eight F-1 engines. The vehicle payloads of such a design are approximately 480,000 pounds for 96-minute orbit, 176,000 pounds to escape, and 63,000 pounds soft-landed on the moon. The vehicle shown in Fig. II-45 has been investigated in some detail. Since it is an extension of, rather than a part of the carrier system used in establishing the proposed lunar outpost, line drawings of individual stages are not shown; however, the weight summary is given in Table II-15. The vehicle is subject to the optimization aspects discussed for the SATURN II vehicle. The booster is a single-tank design with compression loaded tank sections. Pressure carries only about one-fourth of the longitudinal loads. The second stage has a longitudinally stiffened tank section. However, loads, except bending, are carried by the pressures required to meet the engine net-positive suction-head requirements. Propulsion is provided by four 1,200,000-pound thrust $O_2/H_2$ engines or equivalent. The third and fourth stages are similar to the second stage in structural concept. Third-stage propulsion can be one 1,200,000-pound $O_2/H_2$ engine, and fourth-stage propulsion one 500,000-pound thrust $O_2/H_2$ engine or equivalents.

A projection of the nuclear rocket development program, PROJECT ROVER, indicates that useful nuclear engines may be forthcoming in time for upper stage application in the second generation SATURN and the eight F-1 engine cluster vehicle. An investigation has been made of the possible growth potential of the proposed chemical propellant boosters with nuclear upper stages. The present trend of development indicates that the evolution of nuclear engines will begin with a conservative system which has a low thrust level and low specific impulse compared with estimated potentials. If reactor materials technology advances as expected, then the specific impulse, power density, and thrust level would be increased accordingly. Therefore, in order that the vehicle growth potential might coincide with a logical genesis of nuclear engines, three applications representing different thrust levels and time periods are considered. These are as follows: (1) 50,000-pound (vac) thrust nuclear engine for the third stage of the SATURN II booster, (2) 1.2 million-pound (vac) thrust nuclear engines for second stage of a modified SATURN II booster, and (3) cluster of four 1.2 million-pound (vac) thrust nuclear engines for the second stage of an F-1 cluster class booster. A coated graphite reactor design with a vacuum specific impulse of 900 seconds is assumed for each application.

SECRET
CONFIDENTIAL
UNCLASSIFIED

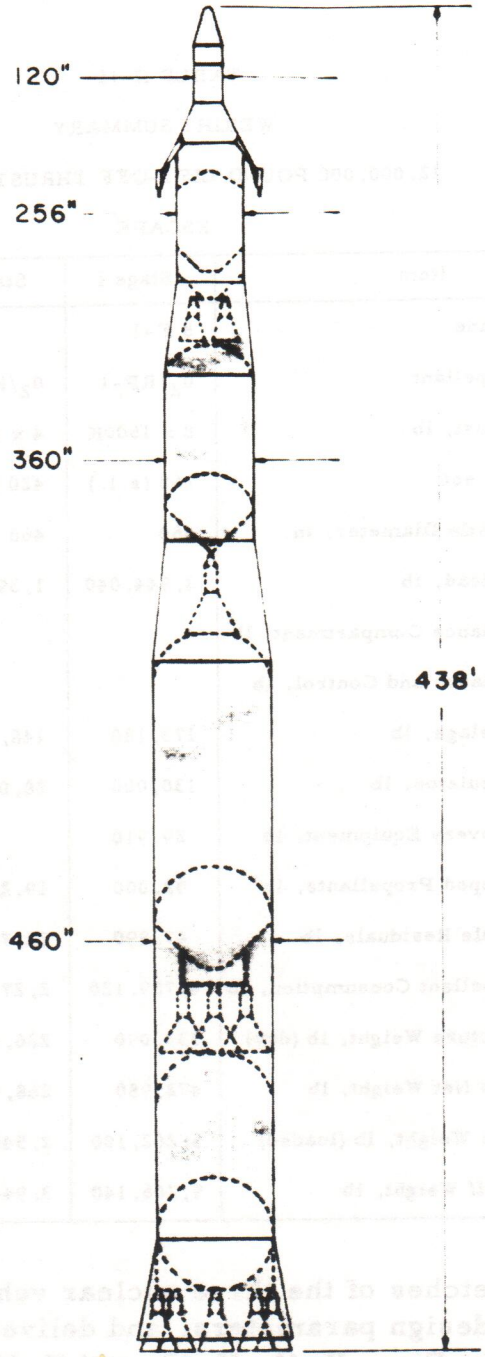


GE 52-3-59
9 MAY 59

Fig. II-45. Dimensions of Space Carrier Vehicle Based on 8 X 1.5 Million Cluster



UNCLASSIFIED
CONFIDENTIAL
SECRET

TABLE II-15

WEIGHT SUMMARY

12,000,000 POUND LIFT-OFF THRUST VEHICLE

ESCAPE

| Item | Stage I | Stage II | Stage III | Stage IV |
|---|---|---|---|---|
| Engine | 8 F-1 | | | |
| Propellant | $O_2$/RP-1 | $O_2/H_2$ | $O_2/H_2$ | $O_2/H_2$ |
| Thrust, lb | 8 x 1500K | 4 x 1200K | 1 x 1200K | 1 x 500K |
| Isp, sec | 268 (s.l.) | 420 (vac) | 420 | 420 |
| Missile Diameter, in. | 460 | 460 | 360 | 256 |
| Payload, lb | 3,944,040 | 1,397,700 | 514,300 | 175,880 |
| Guidance Compartment, lb | | | | 1,000 |
| Guidance and Control, lb | | | 1,000 | 2,500 |
| Fuselage, lb | 173,180 | 148,500 | 52,230 | 18,700 |
| Propulsion, lb | 130,000 | 78,000 | 19,500 | 6,500 |
| Recovery Equipment, lb | 29,910 | | | |
| Trapped Propellants, lb | 92,000 | 19,200 | 4,800 | 2,000 |
| Usable Residuals, lb | 47,890 | 22,780 | 7,980 | 22,780 |
| Propellant Consumption, lb | 4,789,120 | 2,277,860 | 797,890 | 284,940 |
| Structure Weight, lb (dry) | 333,090 | 226,500 | 72,730 | 28,700 |
| Stage Net Weight, lb | 472,980 | 268,480 | 85,510 | 53,480 |
| Stage Weight, lb (loaded) | 5,262,100 | 2,546,340 | 883,400 | 338,420 |
| Liftoff Weight, lb | 9,206,140 | 3,944,040 | 1,397,700 | 514,300 |

Sketches of the three nuclear vehicles along with a breakdown of weight, design parameters, and deliverable lunar surface payloads are shown in Figs. II-46, II-47, and II-48. Some technical data of these vehicles are summarized in Tables II-16, II-17, and II-18.

In comparing the relative performance of nuclear upper staging with chemical propellant upper staging, the three nuclear vehicles indicate a substantial growth potential over their chemical propellant counterparts for identical vehicle lift-off weights for pure cargo flights requiring no radiation shielding.

CONFIDENTIAL
SECRET
CONFIDENTIAL
UNCLASSIFIED

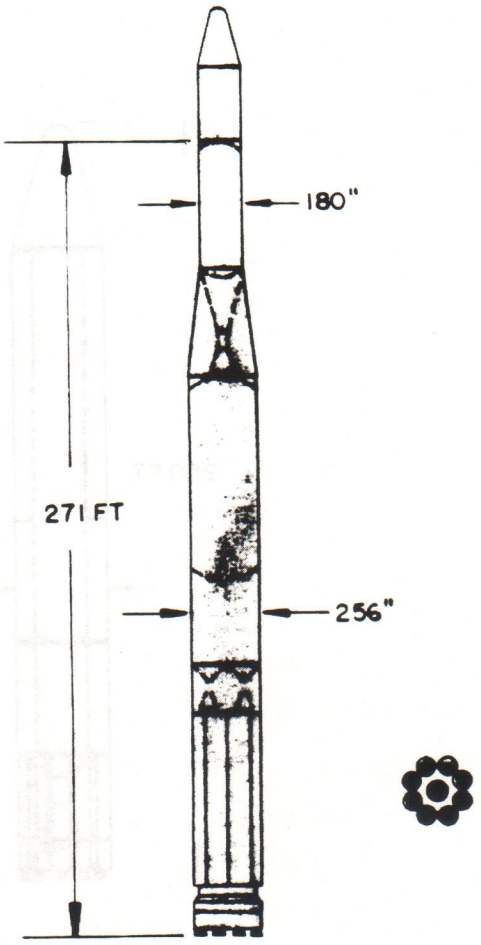


GE 52-7-59
9 MAY 59

Fig. II-46. SATURN II with Nuclear 3rd Stage



UNCLASSIFIED
SECRET
CONFIDENTIAL

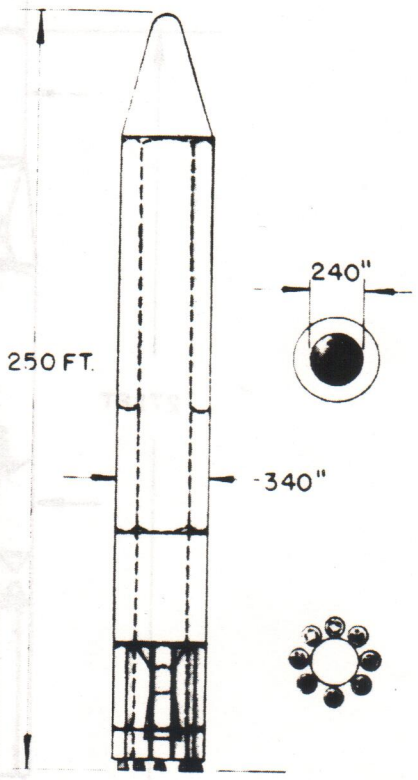


GE 52-6-59
9 MAY 59

Fig. II-47. SATURN II with Nuclear 2nd Stage

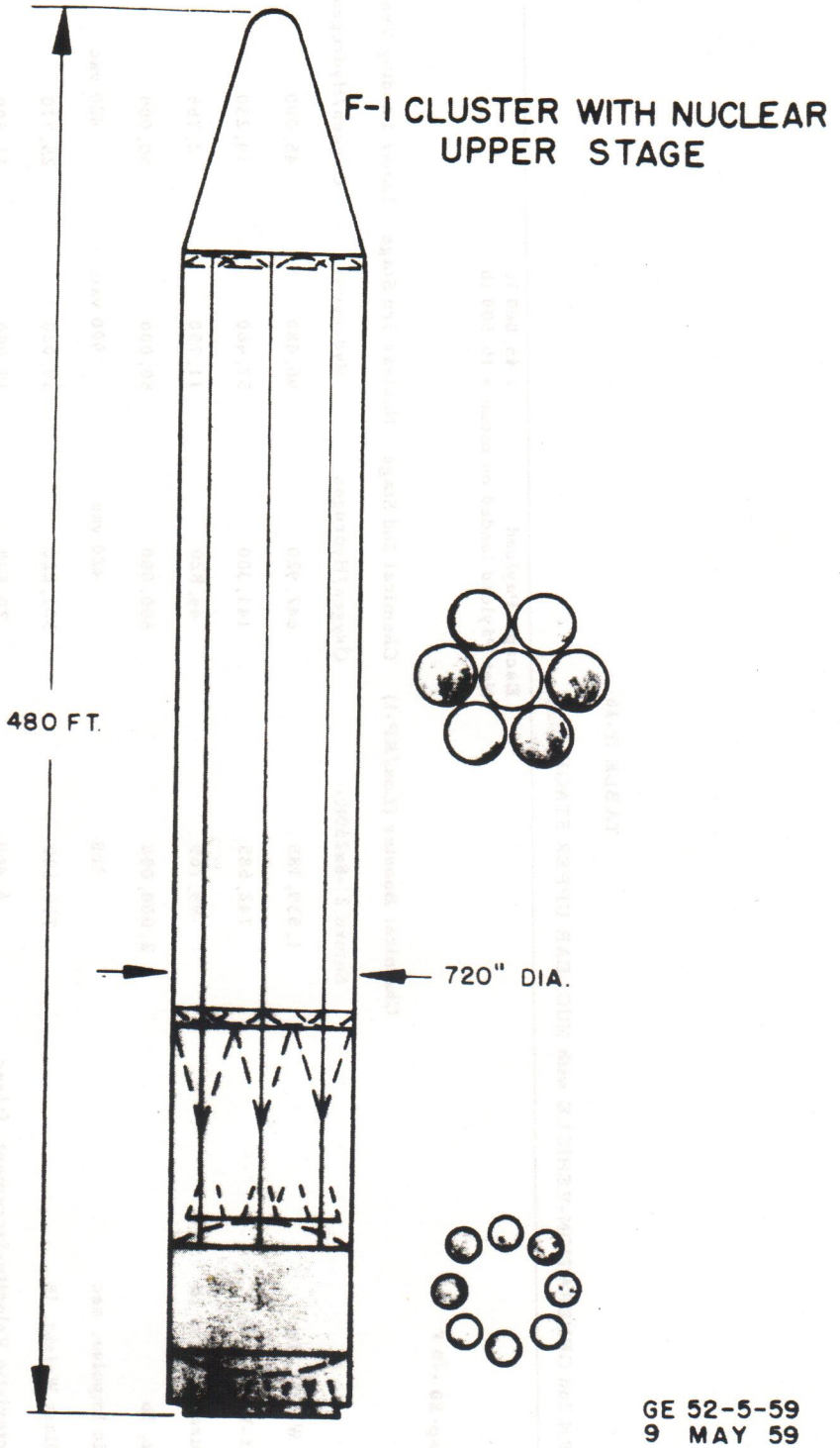


Fig. II-48. F-1 Cluster Vehicle with Nuclear Upper Stage

TABLE II-16

SATURN 2nd GENERATION-VEHICLE with NUCLEAR UPPER STAGE(50K)

Escape-Payload = 45,000 lb
Net Payload landed on moon = 16,500 lb

$v^* = I_{sp} \cdot g_0 \cdot \ln r$

| | Chemical Booster (Lox/RP-1) | Chemical 2nd Stage | Nuclear 3rd Stage | Lunar Landing Vehicle |
|---|---|---|---|---|
| | Saturn 2 -8x250K- | Oxygen/Hydrogen | Hydrogen | Oxygen/Hydrogen |
| Gross Weight, lb | 1,539,185 | 642,920 | 96,480 | 45,000 |
| Cut-Off-Weight, lb | 742,685 | 141,300 | 57,460 | 19,230 |
| Structural Weight, lb | 99,765 | 44,820 | 11,750 | 2,765 |
| Thrust, lb | 2,000,000 | 800,000 | 50,000 | 50,000 |
| Specific Impulse, sec | 260 | 420 vac | 900 vac | 420 vac |
| Propellant Weight, lb | 796,500 | 501,620 | 39,020 | 25,770 |
| Characteristic Velocity-Increment, ft/sec | 6,460 | 20,540 | 15,000 | 11,500 |
| Payload, lb | | | 45,000 | 16,465 |
| Remarks: | | | | |



CONFIDENTIAL

TABLE II-17

SATURN 2nd GENERATION-VEHICLE with NUCLEAR UPPER STAGE (1, 200K)

| | | | | |
|---|---|---|---|---|
| Escape Payload = 135, 000 lb<br>Net Payload landed on moon = 57, 800 lb<br>$v^* = I_{sp} . g_o . \ln r$ | | Note: Parallel Staged Tankage - 47, 850 lb structural weight will be dropped after Stage II.<br>Same engine ($1.2 \times 10^6$-nuclear) is used for Stage III. | | |
| | Chemical Booster (Lox/RP-1) | Nuclear Upper Stage(s) | Applying Parallel | Lunar Landing Vehicle |
| | Saturn 2 -8 x 250K- I | 1 x 1200K -Hydrogen- II | TANKSTAGING III | Nuclear -200K -Hydrogen - - Payload |
| Gross Weight, lb | 1, 539, 185 | 960, 000 | 452, 400 | 135, 000 |
| Cut-Off Weight, lb | 1, 060, 000 | 500, 000 | 227, 420 | 90, 800 |
| Structural Weight, lb | 100, 000 | 139, 880 | 92, 300 | 33, 000 |
| Staged Weight, lb | | 47, 580 | | |
| Thrust, lb | 2, 000, 000 SL | 1, 200, 000 vac | 1, 200, 000 vac | 200, 000 |
| Specific Impulse, sec | 260 SL | 900 vac | 900 vac | 900 vac |
| Propellant Weight, lb | 479, 185 | 460, 000 | 224, 980 | 44, 200 |
| Characteristic Velocity-Increment, ft/sec | 3, 305 | 18, 895 | 19, 910 | 11, 500 |
| Payload, lb | | | 135, 000 | 57, 800 |
| Remarks: | | | | |

UNCLASSIFIED CONFIDENTIAL
CONFIDENTIAL UNCLASSIFIED

TABLE II-18

**F-1 CLUSTER VEHICLE with NUCLEAR UPPER STAGES (Tank and Engine-Staging)**

Escape Payload = 780,000 lb
Net Payload landed on moon = 426,500 lb

$v^* = I_{sp} \cdot g_o \cdot \ln r$

Note: PARALLEL STAGING OF NUCLEAR CONFIGURATION:
The three non-enginetanks are jettisoned after burn-out; then the remaining three outboardtanks together with their engines are dropped after burn-out; finally the remaining Centertank with one engine continues accelerated flight and will be separated from the Payload (which is in this case another rocket-system).

| | Chemical Booster (Lox/RP-1) 12,000K CLASS 8 x1,500K | Nuclear Upper Stages Applying Parallel Tank-and Engine-Staging 4 x1,200K 7 Tanks | 4 x 1,200K 4 Tanks | 1 x 1,200K 1 Tank | Lunar Landing Vehicle Nuclear 1,200K- Hydrogen = Payload |
|---|---|---|---|---|---|
| | I | II | III | IV | |
| Gross Weight, lb | 9,235,660 | 3,792,650 | 2,604,650 | 1,254,150 | 780,000 |
| Cut-Off Weight, lb | 4,446,540 | 2,712,650 | 1,524,650 | 894,150 | 524,500 |
| Structural Weight, lb | 653,890 | 492,000 | 384,000 | 114,000 | 98,000 |
| Staged Weight, lb | | 108,000 | 270,500 | | |
| Thrust, lb | 12,000,000 SL | 4,800,000 vac | 4,800,000 vac | 1,200,000 vac | 1,200,000 vac |
| Specific Impulse, sec | 268 | 900 vac | 900 vac | 900 vac | 900 vac |
| Propellant Weight, lb | 4,789,120 | 1,080,000 | 1,080,000 | 360,000 | 255,500 |
| Characteristic Velocity-Increment, ft/sec | 6,903 | 9,708 | 15,504 | 9,810 | 11,500 |
| Payload, lb | | | | 780,000 | 426,500 |

CONFIDENTIAL
SECRET
UNCLASSIFIED

The payload weight landed on the lunar surface with the SATURN nuclear third stage vehicle is two times that of the SATURN chemical propellant vehicle. The SATURN with the nuclear second stage and a nuclear landing stage has seven times the SATURN chemical propellant capacity. A further comparison indicates that the SATURN nuclear second stage vehicle could deliver a lunar soft landing payload which approaches the all-chemical propellant F-1 cluster. The truly significant increase in payload with nuclear staging becomes even more apparent when vehicles of the F-1 cluster class are compared. In this case, a vehicle with parallel nuclear upper staging and a nuclear landing stage indicates a lunar surface payload six and one-half times that of the all-chemical-propellant vehicle. The respective lunar soft landing payloads of the three chemically boosted nuclear vehicles described above are 14,500, 58,000, and 420,000 pounds as compared with the respective all-chemical propellant vehicle lunar payloads of 8000 pounds with the SATURN and 63,000 pounds with the F-1 cluster.

The payload weights given for the nuclear staged vehicles do not include an allowance for nuclear radiation shielding. It is possible that the smallest class nuclear vehicle should be unmanned and carry only payloads which would not be contaminated, since the shielding requirements for protection might represent an appreciable portion of the payload weight. For the larger vehicles, if it were desirable to transport personnel and critical cargo, the shielding requirements might range from a negligible weight up to the order of 50,000 pounds depending upon the configuration of the landing stage vehicle and the amount of "free" protection offered by propellant, structure, return stages, etc.

The availability of the 50,000-pound thrust nuclear third stage for initial flight tests on the SATURN could be reasonably established around 1964-1965 and might be operational by 1966-1967 in time to support Project HORIZON. The initial flight test of a nuclear engine with a vacuum thrust level between one and one and one-half million pounds, while more uncertain, may be possible around 1968-1969, which will be too late for the initial program. It is believed that the state-of-the-art will be sufficiently advanced to support a four-engine clustered arrangement of nuclear engines, with a thrust of one to one and one-half million pounds, in the early 1970's.

UNCLASSIFIED
CONFIDENTIAL

## C. TRANSPORTATION SYSTEM INTEGRATION

### 1. Transportation System Schemes

#### a. Direct Earth-Moon (One-Way and Return Missions)

The earth-moon-earth direct technique is a straightforward method of transporting men to and from the moon. Performance of the SATURN II is such that a marginal capability exists to place two men on the lunar surface with this direct method for a one-way trip. Return to earth would be accomplished by assembling a return vehicle on the moon made up from eight successful flights from the earth which would supply the propellant and engines needed for return. It should be mentioned, however, that the assembly and checkout of such a return vehicle on the moon appears to be difficult as presently foreseen. For this reason, the direct earth-moon flights involve a relatively large risk for personnel and have, therefore, been programmed only for cargo flights during the build-up and early operational phases of this program.

As mentioned above, in the growth potential discussion, direct flights with payloads capable of carrying earth-assembled return vehicles will not be a reality until after the establishment of the 12-man outpost.

It is expected that the basic problems of this transportation method will have been solved by probes and soft-landing vehicles from other programs which will precede the 1964 time period.

Although the direct-transportation method has many advantages, such as minimum time from earth-launch to lunar-landing, there are several disadvantages that should be pointed out:

(1) The maximum weight which could be delivered to the moon at one time would be only 6000 pounds.

(2) The volume and shape of the payload would be limited since it must be flown on a SATURN II through the earth's atmosphere.

(3) No immediate earth-return capability can be provided for personnel.

SECRET
CONFIDENTIAL
UNCLASSIFIED

b. Orbital Technique

From the preceding paragraph, it follows that a larger payload capability would eliminate lunar assembly and thus simplify the manned return problem. Without using larger vehicles, a larger lunar-landing payload capability can be realized during the subject-time provided only by orbital assembly and/or fueling. A vehicle in orbit weighing 400,000 pounds provides the capability to carry a complete earth-return vehicle to the lunar surface. Assuming a mission reliability level of 90 percent earth-to-orbit, less than seven SATURN II vehicles are necessary to provide the components and propellants for one such vehicle in orbit. Approximately 0.75 SATURN II missions per orbit-launched vehicle are required to sustain operations at the orbital station. This saving in total vehicles required is offset to some extent by orbital maneuvers to be performed, and the possibility of only two optimum departure days per month for orbit to lunar surface missions. Each of these optimum days have 15 launch times; that is, one per revolution of the orbit about earth with a time limitation in the order of one minute on the actual launch. The above launch restrictions are imposed for flight mechanics reasons but impose no real operational problems.

It should be pointed out that the 400,000 pound orbital departing vehicle weight was chosen because it is the new minimum weight required (based on expected technology during the subject time period) to transport two men to the moon and return them to earth. This weight, 400,000 pounds, is by no means fixed and could be changed to provide more or possibly even less payload capability.

Although the orbital method of transportation to the moon has many advantages over the direct method, there are several disadvantages that should be mentioned:

(1) A longer time between earth-departure and moon-landing is required.

(2) Additional personnel are required in space (orbital fueling or assembly crews).

(3) The orbiting station would possibly be vulnerable to attack should a hostile nation wish to combat the U. S. lunar program.

It should be noted, however, that the orbital techniques will be required for any ambitious interplanetary missions requiring



UNCLASSIFIED
CONFIDENTIAL
SECRET

sizeable payloads since these will require orbital assembly or refueling, thus further justifying its continued development under this program.

c. Combination of Techniques

Because of the limitations resulting from the state-of-the-art in the time period of interest (1964-1967), it seems to be more desirable to use both routes for the earth-moon transportation system, with a preference for cargo transportation on the direct route, and personnel transportation to the moon via orbit. On the other hand, the transport of cargo packages larger than 6000 pounds can be accomplished only via orbital refueling, whereas the direct personnel transfer, earth-moon, should be developed in the long-run for emergency situations. More freedom in selecting the route will become available by about 1967/1968 when larger payload capabilities than those represented by the all-chemical SATURN II are expected to materialize.

If the direct route and the via-orbit route are compared for the time period of 1964 through 1967, based on SATURN II capabilities the advantages and disadvantages can be summarized as follows:

(1) Orbital refueling operations are considered simpler than lunar assembly operations, since more manpower and equipment can be made available for a simpler job.

(2) The direct route allows a daily firing chance (with some payload reduction) as compared to two chances a month from orbit. This limitation on possible orbital launch times is not considered serious because only one firing every three or four months is scheduled.

(3) The payload capability for one flight is limited on the direct route and practically unlimited via orbital refueling.

(4) The combination of direct and via-orbit route offers the most promising schedule for the overall program, and provides, at the same time, back-up capabilities in either case if unforeseen difficulties should arise with one mode of transportation.

(5) Preliminary calculations indicate that the via-orbit route will be more economical (up to 20 percent) than the direct route.

Thus, a combined transportation system using both modes of travel (direct route and via-orbit route) was used for the further planning of this program.

## 2. Transportation System Development

### a. SATURN I

The following paragraphs describe the development sequence envisioned for the space transportation system required for this program. Figure II-49 illustrates the relative size of the first and second generation SATURN carrier vehicles as well as the 12,000,000-pound thrust booster. It should be pointed out that only the SATURN vehicles are required to accomplish this program. Reference is made to Section B of this chapter where the individual building blocks of this transportation system are described in detail.

The development of the SATURN I (first-generation SATURN vehicle) was assigned to the Army Ballistic Missile Agency by the Advanced Research Projects Agency on 15 August 1958. ARPA Order 14-59 authorizes the development of a clustered engine rocket booster, for multi-stage application, with a thrust of approximately 1,500,000 pounds. A subsequent amendment to this order approves fabrication of five such boosters, as described in B. 1 above. The first booster will be utilized only for captive testing, which is scheduled to begin in late 1959. The second and third boosters will be launched as single-stage vehicles incorporating a dummy second stage. The mission of the first two vehicles will be booster development and flight demonstration. The final two of the five approved boosters will be flown as two-stage vehicles incorporating the standard first-generation second stage, as previously described. Again, the objective of the flight will be vehicle development. However, these flights will have an orbital payload capability of approximately 15,000 pounds at an orbital altitude of 200 nautical miles. A secondary mission of "engineering satellite with orbital recovery" appears to be a very promising payload mission and will take full advantage of the available orbital capability.

The SATURN is being designed to incorporate a booster recovery system. All boosters are to be recovered with the possible exception of Numbers 3 and 4. Because of the nature of the secondary missions of these vehicles, the booster re-entry Mach number may be too high to permit successful recovery.

# CARRIER VEHICLES

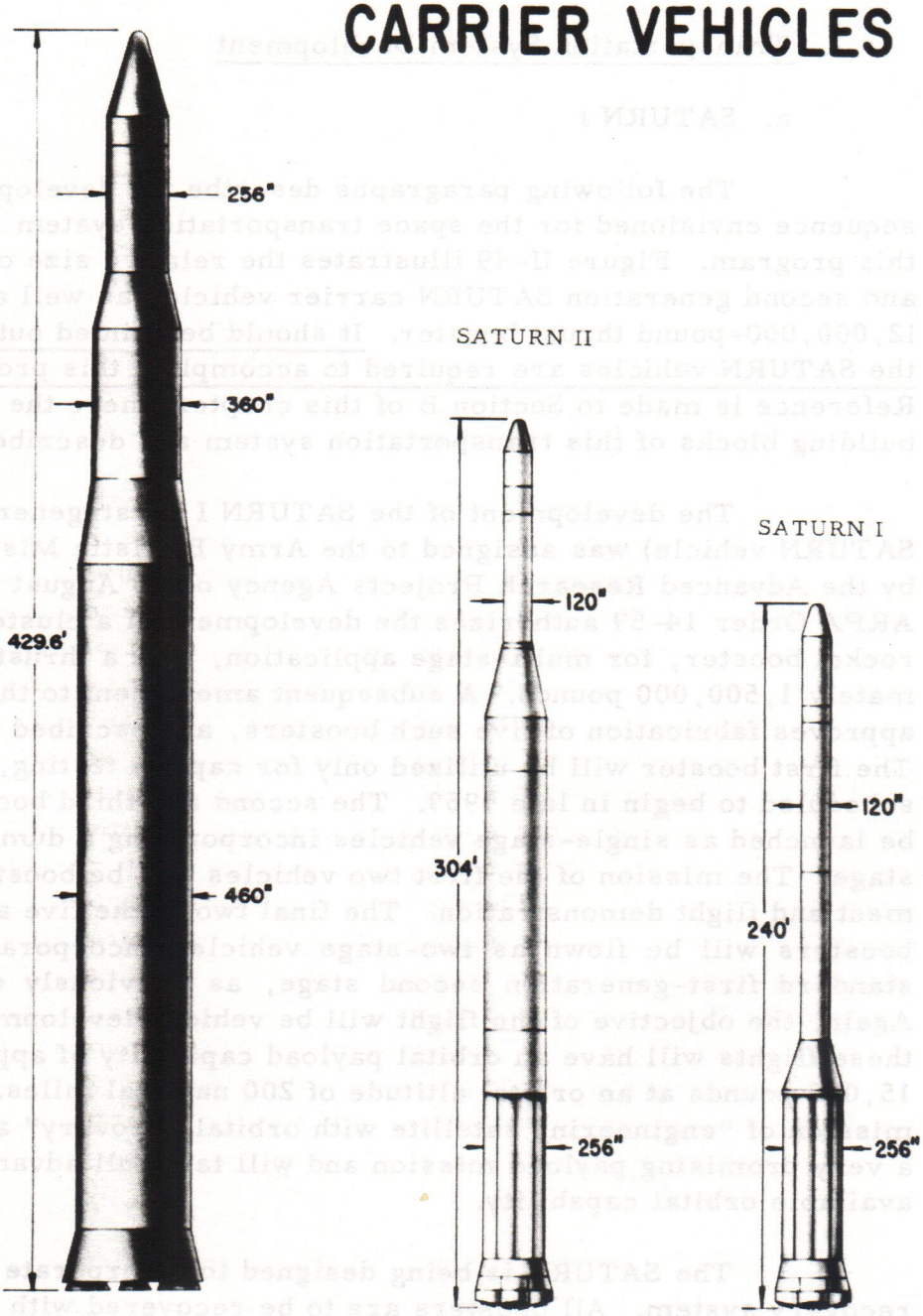


Fig. II-49. Carrier Vehicles - Comparison of Dimensions

CONFIDENTIAL
UNCLASSIFIED

AOMC proposed to ARPA in February 1959 a SATURN I vehicle development program consisting of 16 flight vehicles, including the four mentioned above. Vehicles 5 and 7 would incorporate the standard third stage (possibly excluding the design restart capability), resulting in a flight test of a complete three-stage vehicle. The primary mission of these three will be vehicle development. However, a secondary payload mission will be included. In order not to unduly complicate the vehicle mission, the flight trajectory might be limited to (1) a payload of approximately 25,000 pounds in a low circular orbit; (2) a payload of approximately 7000 pounds in an elliptical orbit; and (3) a space probe type mission with the same payload. Present planning is for a booster thrust of 1,320,000 pounds (8 x 165K) for the first seven flights. The design specifications of the engines are 188,000 pounds thrust each. However, for the initial seven flight vehicles, the engines will be derated to 165,000 pounds each for increased reliability.

With the testing of the first seven vehicles, the second phase of the SATURN I program, prototype testing, will begin. By that time, each booster engine will develop 188,000 pounds thrust for a total booster thrust of 1,504,000 pounds. Incorporated in the vehicle will be the modified TITAN first stage as the standard second-stage and the restartable modified CENTAUR third stage. Although the primary mission of Vehicles 8 through 16 will be vehicle development testing, a secondary mission incorporating various types of payloads will also be included. These nine flights will have almost the full mission capability of the standard SATURN I vehicle, and the payload types will be limited only by mission priority. Based on the presently envisioned program, the launching of SATURN I Vehicle Number 16 will conclude the major development program of the basic three-stage vehicle.

It should be understood that, in addition to the flight schedule shown in Fig. II-50, considerable static firing and environmental testing will be accomplished on each stage as well as on all components.

b. SATURN II

The SATURN II (second-generation SATURN) vehicle has been described in detail in Section B. 1 above. This configuration is considered to be near optimum for the SATURN class vehicle and a natural growth potential using high energy chemical propellants in all upper stages and retaining the same basic first-stage booster



UNCLASSIFIED
CONFIDENTIAL

configuration with one-third increase of thrust. In order to fulfill the space transportation requirements for this program, a vehicle of the SATURN II class is nceessary in order to keep the total vehicle launchings to a reasonable number and make the program more attractive as well as economical.

The 250,000 pound thrust H-2 engine planned for use in the SATURN II first stage is presently in the design and partly in the development stage at NAA Rocketdyne with initial delivery feasible by early 1962. The $H_2/O_2$ engines contemplated for second- and third-stage application are not at present under development. However, several proposals for large (up to 500,000 pound thrust) $H_2/O_2$ engines have been made by Rocketdyne, Aerojet, and Pratt & Whitney. With the advancement in the state-of-the-art of rocket engines in general, as well as the CENTAUR ($H_2/O_2$) engine development, it is believed that the required upper-stage SATURN II engines could be developed in sufficient time to meet the vehicle development schedule. Development programs on the engines previously mentioned should be initiated in the near future. The SATURN II first-stage boosters will be designed for recovery and will possibly utilize the same system as the first-generation vehicles.

The vehicle development program for the SATURN II will be similar to that of the SATURN I and follow closely behind it, as indicated in Fig. II-50. Structural and "plumbing" changes envisioned to convert the first-generation booster to a SATURN II booster using the higher thrust engines should present no new major problems.

The first two SATURN II flights would consist of first-stage booster vehicles with dummy second and possibly dummy third-stages. The third and fourth flights will incorporate an active second stage and the next two flights an active third stage. Since one of the primary missions for the SATURN II in this program is lunar soft landing, a fourth stage will be required. The fourth stage envisioned for this mission could utilize the CENTAUR engines which will, by then, be well proven and require little or no development. The last two vehicles scheduled for the SATURN II development program, Numbers 7 and 8, include, however, an active fourth stage for complete system test as well as overall system development.

In addition to the vehicle development program shown in Fig. II-50, considerable environmental testing will be accomplished

CONFIDENTIAL
UNCLASSIFIED

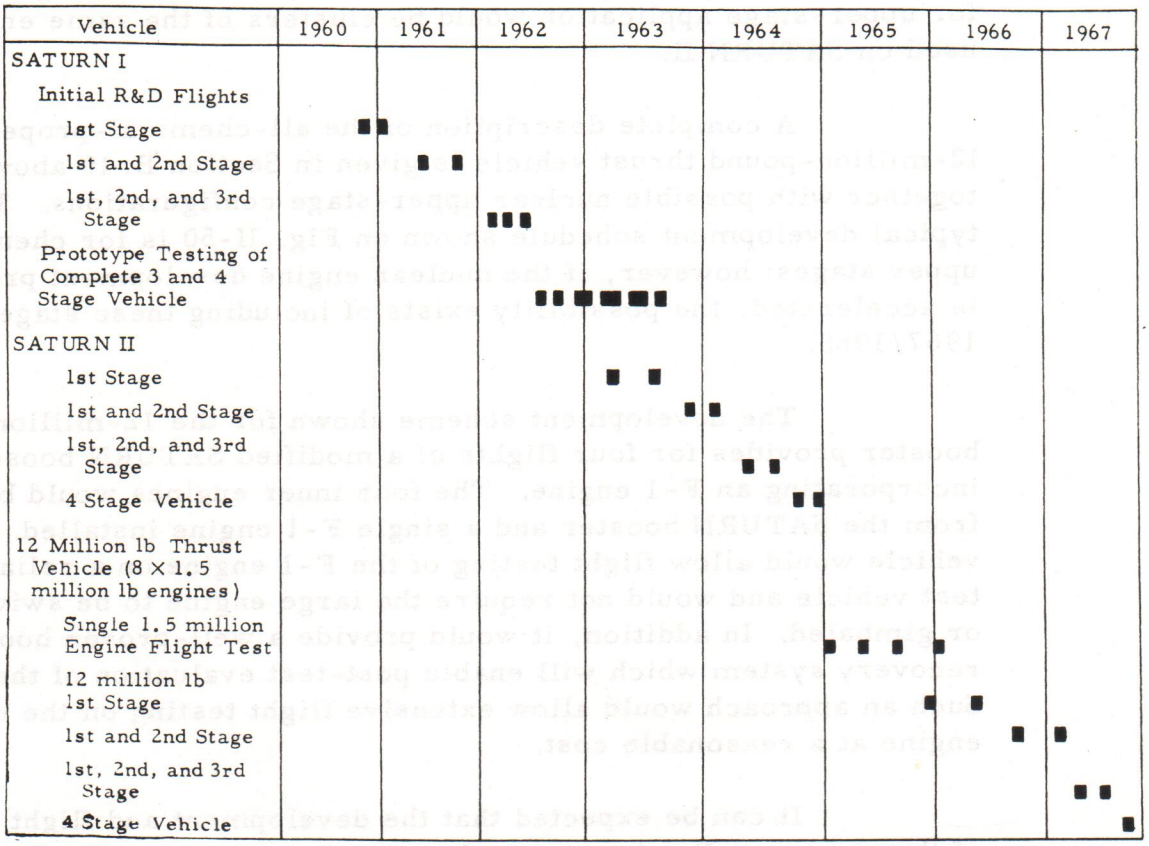


Fig. II-50. Typical Carrier Vehicle Development Firing Schedule

as well as possible flight testing of upper stages or engines on the SATURN I or other vehicles.

Section B. 10 describes the possible application of a nuclear upper stage for the SATURN II vehicle. However, it has not been included in the development program because of the uncertainty of the availability date.

### c. 12-Million-Pound Thrust Vehicle

It should be emphasized that the program outlined in this report does not require the development of a 12-million-pound thrust booster. Such a booster, if developed, would have application in a lunar transportation system. In fact, it would be very desirable for any long range program and would reduce transportation costs further. The 12-million-pound booster would utilize eight Rocketdyne F-1 engines which are presently in the initial development stage

UNCLASSIFIED
CONFIDENTIAL

and scheduled for first delivery in 1963. The chemical $H_2/O_2$ engines for upper-stage application would be clusters of the same engines used on SATURN II.

A complete description of the all-chemical-propellant 12-million-pound thrust vehicle is given in Section B. 10 above, together with possible nuclear upper-stage configurations. The typical development schedule shown on Fig. II-50 is for chemical upper stages; however, if the nuclear engine development program is accelerated, the possibility exists of including these stages in 1967/1968.

The development scheme shown for the 12-million-pound booster provides for four flights of a modified SATURN booster, incorporating an F-1 engine. The four inner engines would be removed from the SATURN booster and a single F-1 engine installed. The vehicle would allow flight testing of the F-1 engine on a reliable test vehicle and would not require the large engine to be swiveled or gimbaled. In addition, it would provide a well-proven booster recovery system which will enable post-test evaluation of the engine. Such an approach would allow extensive flight testing on the new engine at a reasonable cost.

It can be expected that the development and flight test of the clustered F-1 booster and its upper stages will follow the same basic sequence as that of the SATURN development programs described earlier. This would include two flights of the first-stage only, followed by two flights incorporating a second stage, then a third, and finally a fourth stage as shown in Fig. II-50.

d. Orbital Return Vehicle

The development of a manned orbital return vehicle is one of the most urgent requirements for this program as well as for many other U. S. space flight programs. Before the more complex manned space flight missions can be accomplished, man must first develop the techniques for safe passage into orbit, live in orbit, and return to the earth's surface. The development of manned orbital return techniques is currently near the testing stage. The recovery of payloads flown through ballistic trajectories into space was demonstrated by the successful recovery of four JUPITER nose cones, the most recent of which contained two primates. The next steps will be additional recovery of ballistic payloads containing animals;

instrumented and animal orbital recovery; manned ballistic recovery; and, finally, manned orbital recovery. Project MERCURY is the first phase of the program designed to accomplish manned orbital flight.

For the purpose of meeting the requirements of this program, however, the number of personnel required in orbit, and beyond, necessitates the development of a vehicle larger than that envisioned for Project MERCURY. It is assumed that considerable data will be obtained from Project MERCURY and other programs of a similar nature on the basic recovery techniques as well as bio-medical phenomena.

The return vehicle, described in detail in Section B. 3, will have variable high-drag characteristics, and employ the ablation technique for heat protection. The first two flights shown (1961) are scheduled as recoverable engineering satellites which should yield valuable data on orbital recovery of large vehicles as well as various engineering phenomena. These first two vehicles will not, however, have variable lift or drag devices. The vehicles scheduled in 1963/1964 will incorporate the full variable lift or drag features, and will be the prototype for the manned return vehicle, the latter one or possibly two containing men.

A typical program for the manned return vehicle is shown in Fig. II-51 combined with lunar circumnavigation, lunar satellite, and lunar soft-landing programs to form an overall mutually supporting and integrated vehicle and technique development program. The lunar circumnavigation, lunar satellite, and lunar soft-landing programs are described under paragraphs e, f, and g below.

e. Lunar Circumnavigation and Satellites

The development requirement for lunar circumnavigation and satellite vehicles is threefold: (1) collect much needed engineering and scientific information about the moon, (2) provide a transportation system for man and instruments to the vicinity of the moon and return to earth, (3) provide vital information on space navigation, techniques, and procedures for later lunar landings as well as interplanetary missions.

The vehicles scheduled for lunar circumnavigation will utilize the SATURN I as a carrier vehicle to escape the earth's

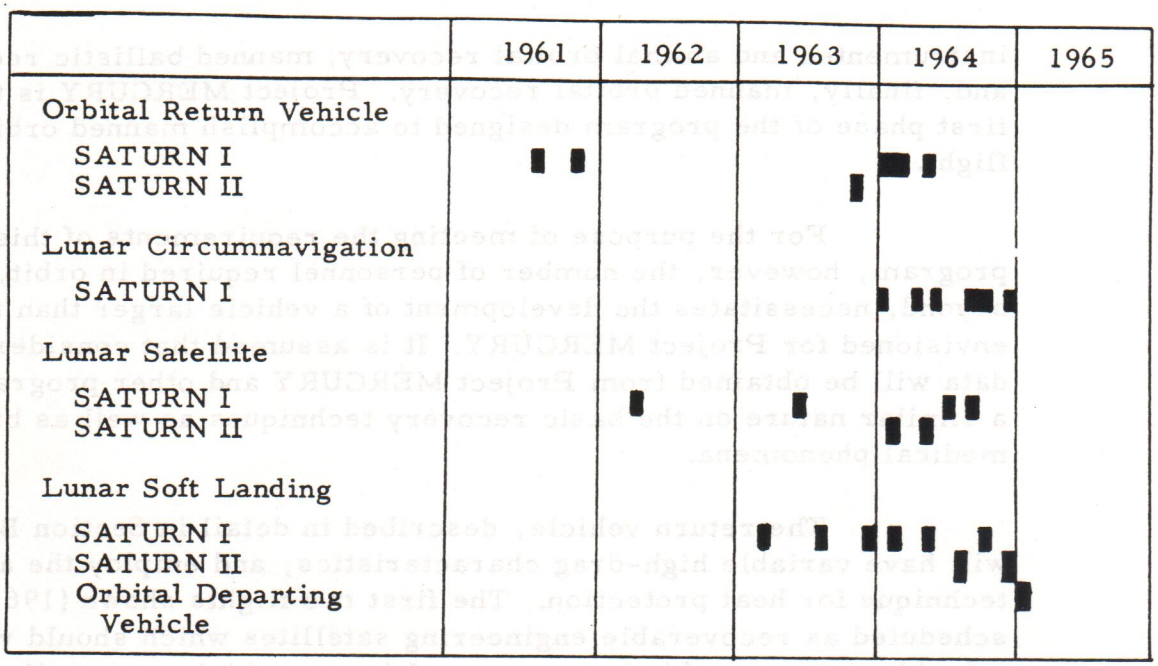


Fig. II-51. Typical Space Vehicle Development Program

gravitational field, and will incorporate a fourth stage for mid-course navigation correction on outbound and inbound trips and for the terminal maneuver near the moon. The first four flights will be unmanned; and, assuming the necessary reliability is established, the latter three flights in 1964 could be manned.

All lunar satellites will be unmanned starting with an exploratory and research satellite utilizing a SATURN I carrier in April 1962. The later lunar satellites are planned to have a long lifetime and will provide communication, navigation, and other data to the lunar outpost later in the program.

The manned circumnavigation vehicles will be almost identical to the moon-earth return vehicles scheduled for the later phases of the program. This results in a minimum number of vehicles to be developed and provides higher reliability for the lunar return vehicles.

f. Lunar Soft-Landing Vehicle

In conducting this program, a requirement exists for the

CONFIDENTIAL SECRET UNCLASSIFIED

development of two types of lunar soft-landing vehicles: (1) a vehicle assembled or fueled in an earth orbit which departs from there for lunar surface, and (2) a vehicle which will depart from the earth's surface, as an upper stage and payload of the basic carrier vehicle, and will go directly to the lunar surface. Although the vehicles themselves may differ in size and shape, the same basic problems, as well as system equipment requirements, exist in both configurations. Each will require a guidance and control system for injection into the desired trajectory for midcourse correction and for lunar landing. The propulsion system required during these three periods could well be the same type.

With the advancement in the state-of-the-art in rocket propulsion systems, and with the advent of new and improved engines as well as guidance and control systems, the major development problem for these vehicles will be integration of components into a system and establishment of techniques and procedures for the missions.

With this in mind, it is believed that unmanned soft lunar landings will first be accomplished by the direct flight method. This can be done much earlier and more economically than via orbit. Considerable data on equipment and techniques will be obtained from lunar circumnavigation and satellite flights from this and other programs. With the successful development of the direct earth-moon soft-landing vehicle, the orbit-departing landing vehicle can be constructed and will require system test rather than development.

Figure II-51 shows the launching dates of the eight SATURN I and II-boosted direct earth-moon landing vehicles. These direct flights will be in addition to those made earlier on such vehicles as ATLAS and TITAN boosters. The one vehicle shown in January 1965 will be a system test for the orbit-departing soft lunar landing vehicle, and will contain cargo only. The first manned flight will be in April 1965 and will provide the two-man crew with an earth-return capability.

g. Moon-Earth Return Vehicle

The guidance and control system required for the moon-earth return vehicle will be similar, if not identical, to the lunar circumnavigation and lunar satellite vehicle systems which will have been developed and well proven by that time. The propulsion system required will be a simple one-stage unit previously developed and well proven on other vehicles. The returning payload compartment will

UNCLASSIFIED CONFIDENTIAL SECRET

have been developed and used to some degree on earth orbital return flights and will be identical to the manned, and unmanned lunar circumnavigation and earth-return capsule. Therefore, the realization of a moon-earth return vehicle will not necessitate the development of a new system but rather will be a system test.

Because of the expense of transportation to the lunar surface, and the actual flight testing of an earth-return vehicle on the moon, the development of the return vehicle will be accomplished on or near the surface of the earth. This will minimize the total cost of development as well as make it feasible to assume that the reliability of the first moon-earth return vehicle will be sufficiently high to justify manned return.

The first two men are scheduled to arrive on the lunar surface in April 1965. The arriving vehicle will have the capability of immediate return to earth if necessary, but is scheduled to remain until after the next manned flight arrives. In addition, it carries a supply of life essentials and equipment necessary to allow the crew to remain on the moon for 14 days without resupply of utilization of other existing payloads already on the moon.

h. Integrated Transportation System Development

The development of the complete space transportation system required for this program involves a larger number of sub-systems and components. The anticipated schedule and expense of the overall transportation system dictates that every effort be made to take full advantage of each sub-development program. However, this will not be allowed to jeopardize the reliability of the overall system, but on the contrary, it will add to the reliability of the final system because of the minimum number of components used. For example, components for the SATURN I guidance system will be utilized for all of the missions and vehicles described earlier; engines developed for the basic carrier vehicles will also be used on the space vehicles; an adaptation of the orbital return vehicle will be used for the lunar circumnavigation as well as moon-earth return.

The combination of Fig. II-50 and Fig. II-51 indicates how the carrier development flight tests are integrated with the space vehicle development schedule. Several of the carrier vehicles are not, however, shown with missions. These will be used for other missions, such as communication satellites, deep-space probes, and orbital supply operations.

CONFIDENTIAL
SECRET
UNCLASSIFIED

3. Transportation Volume Requirements

The space transportation system envisioned for this program will utilize both the direct earth-moon and the earth via earth-orbit to moon methods as mentioned in Section C. 1 above. For the purpose of this preliminary feasibility study, a somewhat arbitrary division was made as to how the transportation requirements would be met. The division is as follows:

a. All personnel (going to the moon) would be transported through orbit.

b. Approximately two-thirds of the cargo would be delivered directly to the moon, and the remaining one-third via orbit.

(1) Personnel

The personnel requirements for the lunar outpost construction and operation have been discussed in considerable detail in Chapter II. The initial manned landing on the moon will be comprised of a two-man crew that would remain on the lunar surface up to approximately four months. This first crew will, however, have a capability of immediate return or of return at any time during the four-month period. The next manned arrival on the moon will consist of a nine-man crew with the major mission of constructing the outpost facilities. The arrival and departure of manned lunar vehicles is given in Fig. II-52. As shown, there is an accumulated build-up of personnel to a total of 12 by the outpost operational date of November 1966. During the initial operational period, scheduled from December 1966 through December 1967, a complement of 12 men will occupy the outpost, with the exception of a short period between the arrival of new personnel and the departure of returning personnel, when there will be up to 16 men present.

As mentioned earlier in this section, all personnel traveling to the moon would do so via an orbital station. Therefore, each of the lunar-bound personnel must also be transported from the earth to the orbital station. In addition to the lunar-bound personnel, construction and fueling, and vehicle checkout crews must also be transported into orbit to prepare the lunar-bound vehicle for flight. Studies indicate that a crew of not more than ten well-trained men could adequately handle this task, based on the type of vehicles and procedures envisioned.


UNCLASSIFIED
SECRET
CONFIDENTIAL

CONFIDENTIAL



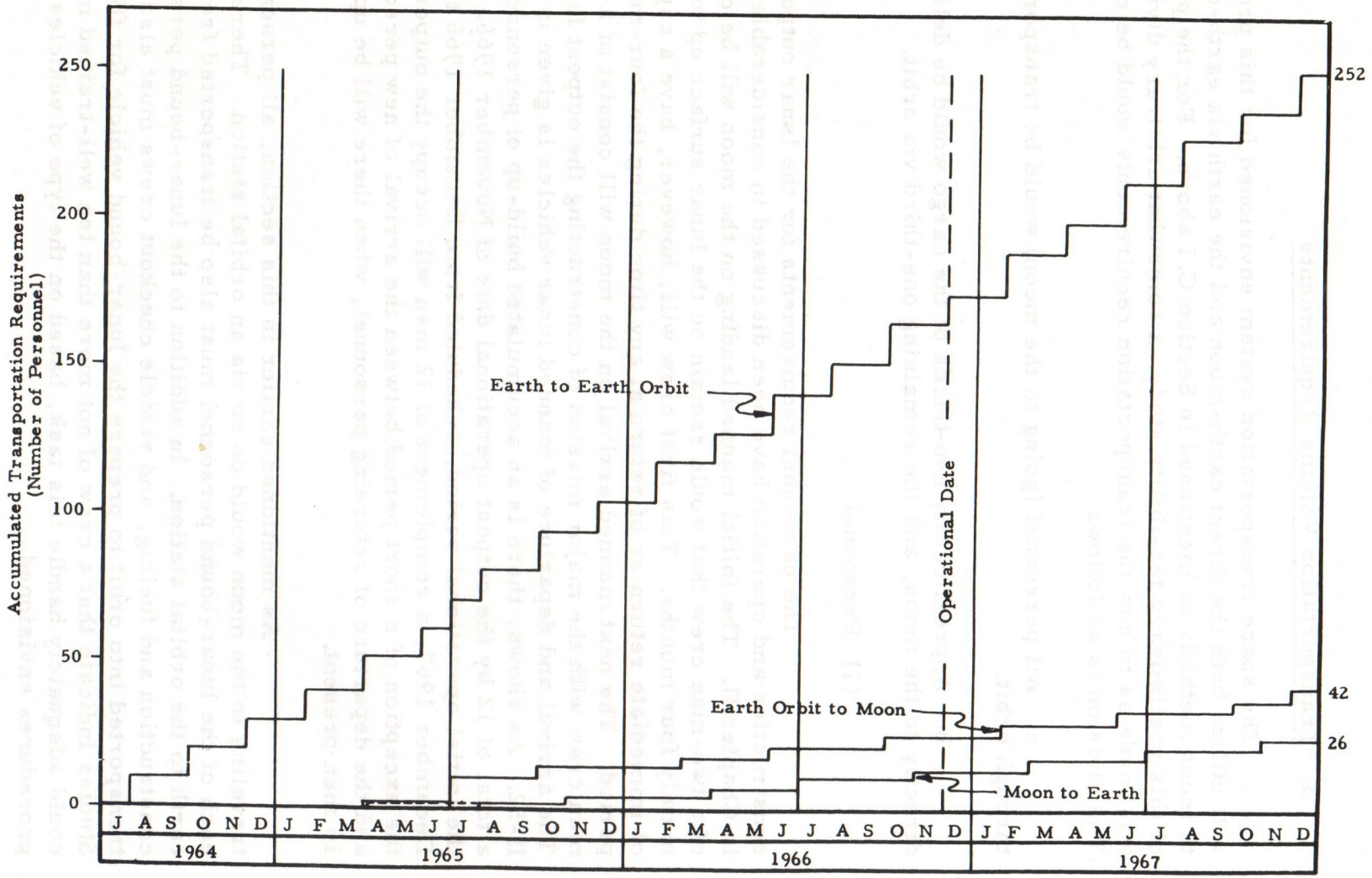


Fig. II-52. Project HORIZON Personnel Space Transportation Requirements

CONFIDENTIAL

CONFIDENTIAL
UNCLASSIFIED

For the purpose of this study, the least advantageous situation has been assumed, that being that no large manned space platform or satellite will be available by 1965, although the likelihood of one's existing is considered good. In such case, a very unsophisticated, manned, 307-nautical-mile equatorial orbital station will be required. This station will be constructed from payload and propulsion stages arriving in orbit and will thus be only a minimum cost to the program. If, however, an orbital station is in existence, its services and facilities will be used. In either case, the ten-man orbital crews will be placed into orbit and will return to earth in the orbital return vehicle described in Chapter III. B. 3. This vehicle, with a capability of up to 16 passengers, will be used for transporting both the orbital crews and the lunar-bound crews. It has been assumed that the orbital crew of ten personnel will remain in orbit for two months before returning to earth. Figure II-52 presents the personnel transportation requirements from earth to the orbital station during the build-up phase and first year of operation of the lunar outpost.

The total manned space transportation requirements from August 1964 through December 1967 are summarized as follows:

| | |
|---|---|
| Earth to earth-orbit | 252 personnel |
| Earth-orbit to moon | 42 personnel |
| Moon to earth | 26 personnel |

(2) Cargo

The detailed cargo requirements for the construction and operation of a 12-man lunar outpost have been described in Chapter II. It should be emphasized that the outpost will be constructed of material taken to the lunar surface, and all personnel will be provided life essentials supplied from earth. It is expected that minerals and other resources will be found on the moon which can and will eventually be used. However, for the purpose of this study, no lunar resources are depended upon. As mentioned earlier in this section, two methods of transportation are envisioned for supplying the required cargo.

The accumulated cargo can be divided into three types to be delivered in a three-phase program. The first type cargo, required to begin construction, must be delivered by July 1965.

UNCLASSIFIED
CONFIDENTIAL

The second type, required for basic outpost construction, must be delivered by November 1966. Phase 3, first year of 12-man outpost operation, requires standard monthly supply of approximately 20,000 pounds per month. These requirements result in a grand total of 756,000 pounds by the end of 1967. In addition to the cargo flights, each manned vehicle will provide life support essentials for each man for 14 days, as well as lunar clothing and a limited amount of personal equipment.

Figure II-53 illustrates the accumulation of the useful payload on the moon over time and also identifies the individual shares. This also indicates the mode of transportation.

Figure II-54 presents the total cargo which must be transported from the earth to the orbital station. These requirements include the cargo payloads bound for the moon via orbit, and the necessary weight to deliver an orbit-to-lunar vehicle (completely fueled) for the cargo as well as manned flights. As indicated in the figure, a grand total of approximately 5,320,000 pounds must be delivered into orbit by the end of 1967 to fulfill the requirements of this program.

A considerable amount of materiel, equipment, and propellants will arrive in orbit which are not considered payload. It is anticipated that a considerable amount of this "non-payload" can be used at the orbital station. For example, the $H_2$ and $O_2$ residuals in the last propulsion stage could be used for fuels in an auxiliary power supply or motor; or the $O_2$ could be used for life support. Each manned orbital flight would also contain cargo up to 10,000 pounds for SATURN I, or 50,000 pounds for SATURN II. Some of this cargo capacity will be utilized for life support essentials for the crew. However, other cargo could be carried and is not considered as part of the 5,320,000 pounds of accumulated payload.

4. Vehicle Requirements

a. Vehicle Capabilities and Limitations

The capabilities and limitations of the vehicles planned for the operational phase of this program are summarized in Table II-19. As can be seen, only two basic carrier vehicles are envisioned, SATURN I and SATURN II. Because of the limited payload capability of the SATURN I for a direct soft lunar landing mission, as compared

CONFIDENTIAL
UNCLASSIFIED

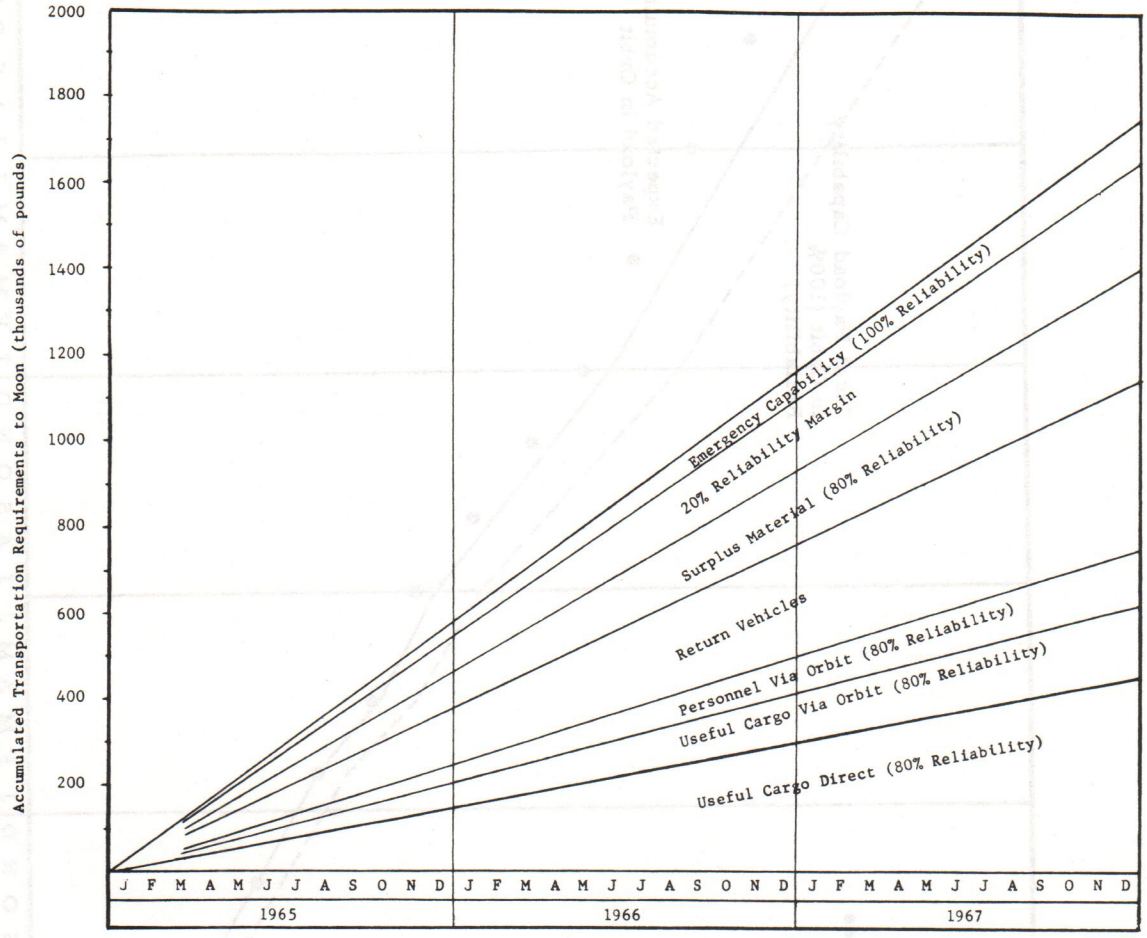


Fig. II-53. Earth-Lunar Transportation Requirements

to the SATURN II, only the latter vehicle will be used for that specific mission. In addition to the two basic carrier vehicles, only three other vehicles are envisioned. These, the orbital return vehicle, the orbit-lunar vehicle, and the lunar-earth return vehicle are indicated in Table II-19. There will be, however, several different types of payload compartments, both manned and unmanned, which will be used. Also shown on this table are the payload capabilities of the individual vehicles, their operational dates, and the average expected reliability during the period through December 1967.

It has been assumed that the launching rate of both SATURN I and SATURN II combined will not exceed eight per month for the entire U. S. space program. This maximum rate (eight launchings per month) is not attained until July 1965. Studies indicate that the



UNCLASSIFIED
CONFIDENTIAL
SECRET

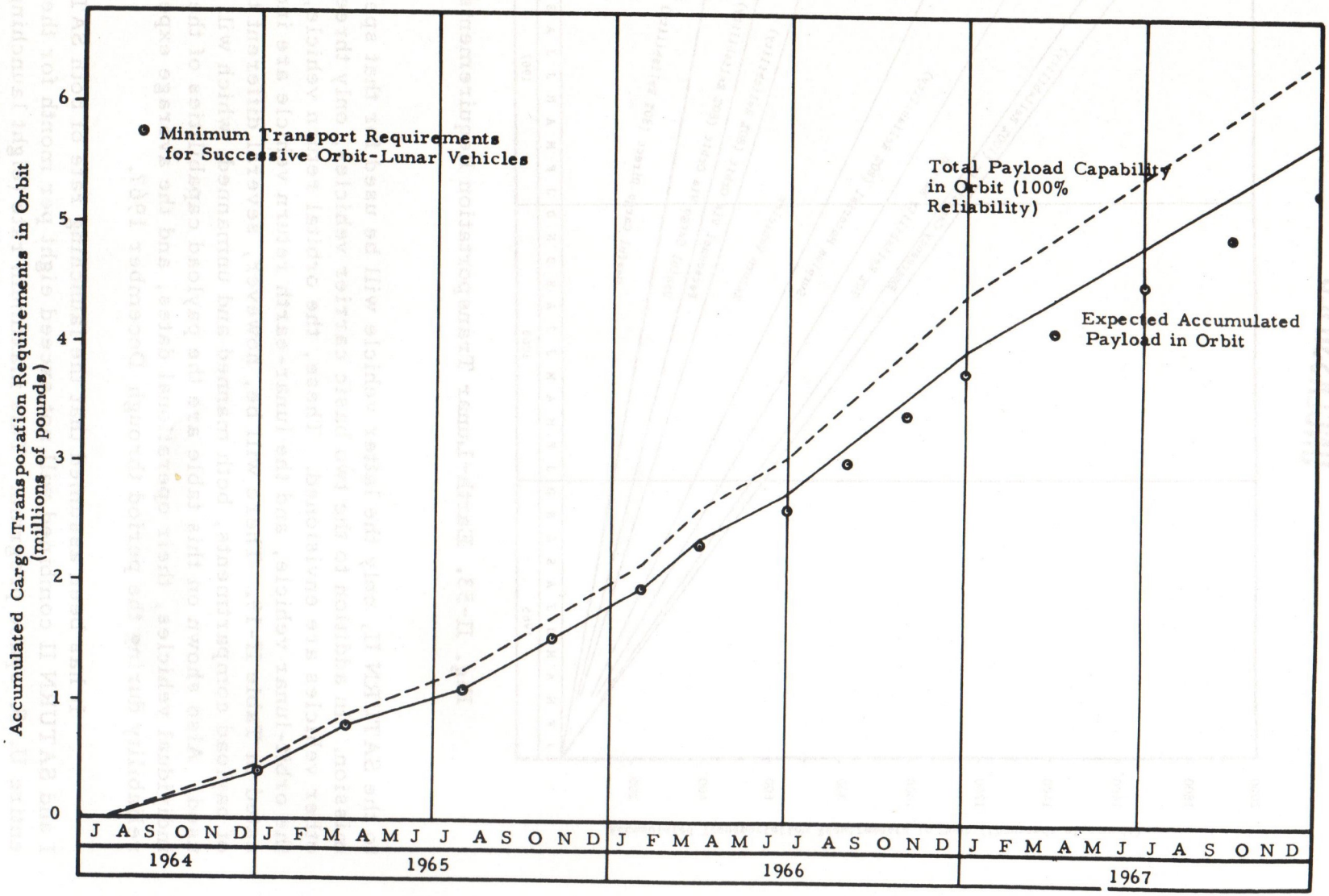


Fig. II-54. Earth-Orbit Cargo Transportation Requirements

SECRET/CONFIDENTIAL
UNCLASSIFIED

Table II-19
SUMMARY OF VEHICLE CAPABILITY AND LIMITATIONS

| Vehicle | Payload Capability, (lb) | Operational Availability | Expected* Mission Reliability (%) |
|---|---|---|---|
| SATURN I | | | |
| Orbital | 30,000 | Oct 1963 | >90 |
| Lunar Landing | 2,000 | May 1964 | 80 |
| SATURN II | | | |
| Orbital | 70,000 | Jan 1965 | 90 |
| Lunar Landing | 6,000 | Jan 1965 | 80 |
| Orbital Return Vehicle (16 men) | 4,000 | May 1964 | >95 |
| Orbit-Lunar Vehicle | 48,000 | Apr 1965 | 90 |
| Lunar-Earth Vehicle | 1,000 | May 1965 | 90 |

*Average expected reliability from operational date through December 1967.

proposed launching rate is well within the production capability and will not place an undue burden on the nation's economy or natural resources.

b. Earth-Moon Direct

As mentioned earlier, approximately two-thirds of the total cargo required on the lunar surface is to be transported directly from the earth to the moon. Because of the smaller payload capability of SATURN I and its inability to transport certain pieces of hardware, only SATURN II vehicles will be used for this mission. In order to meet the transportation requirements shown in Fig. II-53, a total of 73 vehicles is required. This number provides the capability of delivering 324,000 pounds to the moon, taking into consideration a

UNCLASSIFIED
SECRET/CONFIDENTIAL

vehicle-mission reliability of 80 percent. Figure II-55 gives the launching schedule for the 73 vehicles required, starting in January 1965 and continuing through December 1967.

c. Earth to Earth-Orbit

The vehicle requirements for transportation from the earth to the orbital station can be divided into two classes: personnel and cargo.

Considering first the orbital-return vehicle planned for this mission, it has the capability of transporting up to 16 personnel. The requirement for the orbital crew is ten personnel with a stay time in orbit of two months. Therefore, one vehicle every other month would be adequate for that requirement. However, in addition to the orbital crew, the lunar-bound personnel must also be transported into orbit as indicated in Fig. II-52. With the exception of the nine-man lunar outpost construction crew scheduled to go into orbit in July 1965, the number of lunar-bound personnel is always four or less and these can be easily accommodated in the 16-man capsule with the ten orbital personnel. Therefore, with the exception of an additional orbital return vehicle in July 1965, only one vehicle every other month (as shown in Fig. II-55) will meet the manned orbital transportation requirements. The capsule of this additional vehicle, however, will provide the compartment for the nine men in their flight on to the lunar surface.

Because of the non-availability of the SATURN II as well as the higher reliability of the SATURN I during the early phases of the program (1964 through mid 1966), only SATURN I vehicles will be used until 1967. At that time, SATURN I will be phased out of the program and SATURN II vehicles will perform the manned orbital return mission.

Although it would be highly desirable to utilize the SATURN II vehicle exclusively for all orbital supply missions because of its 70,000 pounds of orbital payload, this will not be possible since an adequate number of vehicles will not be available. In addition, the SATURN II is in the R&D and early operational stage phases during 1964 and early 1965 which will result in a lower reliability than the SATURN I. With this in mind, the orbital cargo transportation requirement has been divided between the two vehicles with emphasis on the SATURN I and phasing over to the SATURN II exclusively by January 1967. Assuming an average vehicle and mission reliability

UNCLASSIFIED CONFIDENTIAL

Number of Flights for Designated Dates

| Vehicle and Mission | 1964 | | | | | 1965 | | | | | | | | | | | 1966 | | | | | | | | | | | | 1967 | | | | | | | | | | | | Total Flights |
|---|---|---|---|---|---|---|---|---|---|---|---|---|---|---|---|---|---|---|---|---|---|---|---|---|---|---|---|---|---|---|---|---|---|---|---|---|---|---|---|---|
| | J | A | S | O | N | D | J | F | M | A | M | J | J | A | S | O | N | D | J | F | M | A | M | J | J | A | S | O | N | D | J | F | M | A | M | J | J | A | S | O | N | D | |
| Lunar Soft Landing Vehicle (Direct) | | | | | | | | | | | | | | | | | | | | | | | | | | | | | | | | | | | | | | | | | | |
| SATURN II | | | | | | | 1 | 1 | 1 | 1 | 1 | 2 | 2 | 2 | 2 | 1 | 2 | 2 | 2 | 2 | 2 | 2 | 2 | 2 | 3 | 2 | 3 | 2 | 3 | 2 | 3 | 2 | 2 | 3 | 2 | 2 | 3 | 2 | 2 | 3 | 2 | 2 | 73 |
| Earth-Orbit and Return (Manned) | | | | | | | | | | | | | | | | | | | | | | | | | | | | | | | | | | | | | | | | | |
| SATURN I | | 1 | | 1 | | 1 | | 1 | | 1 | | 1 | 1 | 1 | | 1 | | 1 | | 1 | | 1 | | 1 | | 1 | | 1 | | 1 | | | | | | | | | | | | 16 |
| SATURN II | | | | | | | | | | | | | | | | | | | | | | | | | | | | | | | | 1 | | 1 | | 1 | | 1 | | 1 | | 1 | 6 |
| Earth-Orbit (Cargo) | | | | | | | | | | | | | | | | | | | | | | | | | | | | | | | | | | | | | | | | | |
| SATURN I | | 1 | 3 | 1 | 3 | 3 | 4 | 3 | 3 | 2 | 2 | 3 | 2 | 3 | 3 | 2 | 2 | 1 | 1 | 1 | | 1 | | 1 | | 1 | | | | 1 | | | | | | | | | | | | 47 |
| SATURN II | | | | 1 | | | | 1 | 1 | 1 | 1 | | | 1 | 1 | 1 | 1 | 2 | 2 | 3 | 3 | 2 | 3 | 2 | 3 | 3 | 3 | 3 | 3 | 2 | 2 | 2 | 2 | 3 | 2 | 2 | 3 | 2 | 2 | 3 | | 71 |
| Emergency Vehicles | | | | | | | | | | | | | | | | | | | | | | | | | | | | | | | | | | | | | | | | | |
| SATURN I | | | | | | | 1 | 1 | | | 1 | | | | | | | 1 | | | | | 1 | | | | 1 | | | | | | | | | | | | | | | 6 |
| SATURN II | | | | | | | | | | | | | 1 | | | | 1 | | 1 | | 1 | | 1 | | | | 1 | | | | | 1 | | 1 | | 1 | | 1 | | | | 10 |
| Orbit-Lunar Soft Landing (Cargo) | | | | | | | 1 | | | | | | | | | | | | 1 | | | | | | | 1 | | | | 1 | | | | | | | | | | | | 4 |
| Orbit-Lunar Soft Landing (Manned) | | | | | | | | | | 1 | | | 1 | | | 1 | | | | 1 | | | 1 | | | | | 1 | | | | | 1 | | 1 | | 1 | | 1 | | | 10 |
| Lunar-Earth Return | | | | | | | | | | | | | | 1 | | | 1 | | | | 1 | | | 1 | | | | 1 | | | | | | 1 | | 1 | | 1 | | | | 8 |
| Total | | | | | | | | | | | | | | | | | | | | | | | | | | | | | | | | | | | | | | | | | |
| SATURN I | | 2 | 3 | 2 | 3 | 4 | 5 | 5 | 3 | 3 | 3 | 4 | 3 | 4 | 3 | 3 | 2 | 3 | 1 | 2 | | 2 | 1 | 2 | | 2 | 1 | 1 | | 2 | | | | | | | | | | | | 69 |
| SATURN II | | | | 1 | | | 1 | 2 | 2 | 2 | 2 | 2 | 3 | 3 | 3 | 2 | 4 | 4 | 5 | 5 | 5 | 5 | 5 | 5 | 6 | 5 | 6 | 6 | 6 | 4 | 5 | 6 | 5 | 6 | 5 | 6 | 5 | 6 | 5 | 6 | 5 | 6 | 160 |
| Total Carrier Vehicles for Project HORIZON | | 2 | 3 | 3 | 3 | 4 | 6 | 7 | 5 | 5 | 5 | 6 | 6 | 7 | 6 | 5 | 6 | 7 | 6 | 7 | 5 | 7 | 6 | 7 | 6 | 7 | 7 | 7 | 6 | 6 | 5 | 6 | 5 | 6 | 5 | 6 | 5 | 6 | 5 | 6 | 5 | 6 | 229 |

OUTPOST OPERATIONAL DATE

Fig. II-55. Project HORIZON Vehicle Requirements and Launching Schedule



CONFIDENTIAL UNCLASSIFIED

of 90 percent during the entire operation, the total number of vehicles required for earth-orbit cargo missions is 47 SATURN I's and 71 SATURN II's, as is shown in schedule form on Fig. II-55.

d. Earth Orbit-Moon

The vehicle requirements for transportation from the orbital station to the lunar surface likewise can be divided into two classes: personnel and cargo.

The additional cargo requirements are satisfied with a total of four flights with a 48,000-pound capability each. Ten percent of these payload weights are needed for the payload container.

The personnel transportation requirements are satisfied with a total of ten flights, one of which does not carry a return vehicle. These vehicles allow the arrival of 42 personnel and the departure of 30 during the time period of interest, the last one leaving in January 1968.

e. Moon-Earth Return

The return schedule is shown in Fig. II-52.

The initial crew of two men will arrive with the capability of returning to earth immediately after arrival or at some later date as desired. The next manned lunar landing will consist of nine-man construction crew and will have no immediate return capability. The following plan is envisioned for providing them with a return capability. The third manned vehicle arriving on the moon would contain a crew of four personnel and provide a return capability back to earth for three of the original nine-man construction crew. At this time, a total of nine men are at the outpost since the first two men have already departed. On the next three flights, four men arrive and three depart; at the completion of which there are 12 men on the moon. With the required outpost complement of 12, all succeeding flights would bring four personnel to the moon and return four men back to earth as is shown in Fig. II-52. This return operation through 1967 would require a total of eight vehicles: the first returning two men, the next four vehicles returning three men, and the remaining three vehicles returning four men as scheduled in Fig. II-55. Although it is not shown on the schedule, four men will be returned to earth in January 1968, using the return vehicle arriving on the moon in December 1967.

SECRET
CONFIDENTIAL
UNCLASSIFIED

f. Integrated Vehicle Requirements

In addition to the vehicle requirements discussed in the preceding four sections, it is believed essential to include an additional category of vehicle requirements, that of emergency vehicles.

It should be understood, however, that the "emergency vehicles" are not added to compensate for vehicle or mission reliability: they are insurance for the timely accomplishment of the program. In each of the vehicular requirements reviewed above, an appropriate reliability factor was used in computing the total requirements. These emergency vehicles are included to compensate for unpredictable difficulties such as equipment damage by meteoroids at the orbital station or on the moon; accidental damage of equipment which would require replacement, and to provide a standby for emergency needs for life support essential equipment on the moon or at the orbital station.

The total vehicle requirements as well as the launching rates outlined in Fig. II-55 are considered to be feasible and well within the national capability. With the estimated production rates used in this study, a total of 355 SATURN I's and SATURN II's could be launched by the end of 1967. Of these 355, only 229, less than two-thirds of the vehicles, would be required for this program. This would leave 84 SATURN I's and 42 SATURN II's for other programs such as the 24-hour communication satellite system, space probes, and other missions as required.

## D. PAYLOAD PREPARATION AND SCHEDULING

### 1. Payload Preparation

Final preservation, packaging and packing of cargo will be accomplished at the earth launch site. Unusual methods and procedures are necessary primarily because of the near perfect vacuum of the lunar environment, and the great range of temperature on the lunar surface. Other phenomena to be considered are radiation hazards, meteoritic, and meteoroidic bombardment. Sterilization to prevent the introduction of terrestrial organisms to the lunar surface will be required.

UNCLASSIFIED
SECRET
CONFIDENTIAL

The storage and packing facility will be staffed for and be capable of assembly line production with a further capability of functioning during emergency situations. It is felt that packing must be accomplished at the launch site for added assurance of satisfactory condition of packed items. Quality assurance in a program of this nature must be extremely high to preclude any possibility of forwarding damaged or faulty items. Provisions will be made for appropriate inspection of technical supplies at the launch site.

2. Typical Loads and Schedules

Figure II-56 and Tables II-20 and II-21 demonstrate plans for scheduling and allotting cargo by type and quantity. The data contained in these tables represent best estimates available at this time.

A generalized schedule is displayed in Fig. II-56. Construction equipment and materials are depicted as comprising the bulk of initial cargo. The scheme further depicts life essential supplies eventually replacing construction material as the primary cargo. This increase is necessary to build up and adequate reserve. Detailed supply scheduling will proceed as additional information becomes available and item weights, cubes, and configurations become stabilized. Further operational planning and finalized vehicle design must also precede detailed supply scheduling.

Packaging will involve a variety of methods and materials. Light, flexible materials (mylar, aluminum foil, etc.) will be used as wrapping to minimize overall weight.

Containers will be constructed of lightweight metals or plastics, and will be designed to serve as cabinets, tables, bunks, dining equipment, etc. The concept of multipurpose design in containers will be exploited. The weight of any containerized package will not exceed 150 earth pounds for handling reasons excepting outsized items of unusual configuration.

Human engineering considerations in container design will include provision for handling by men in lunar suits, accessibility within cargo container, ease of moving, identification, ease of operation of fasteners and closures, and ease of assembly into functional units (housing, storage, furniture, etc.). All containers will be vacuum packed.

SECRET/CONFIDENTIAL
UNCLASSIFIED

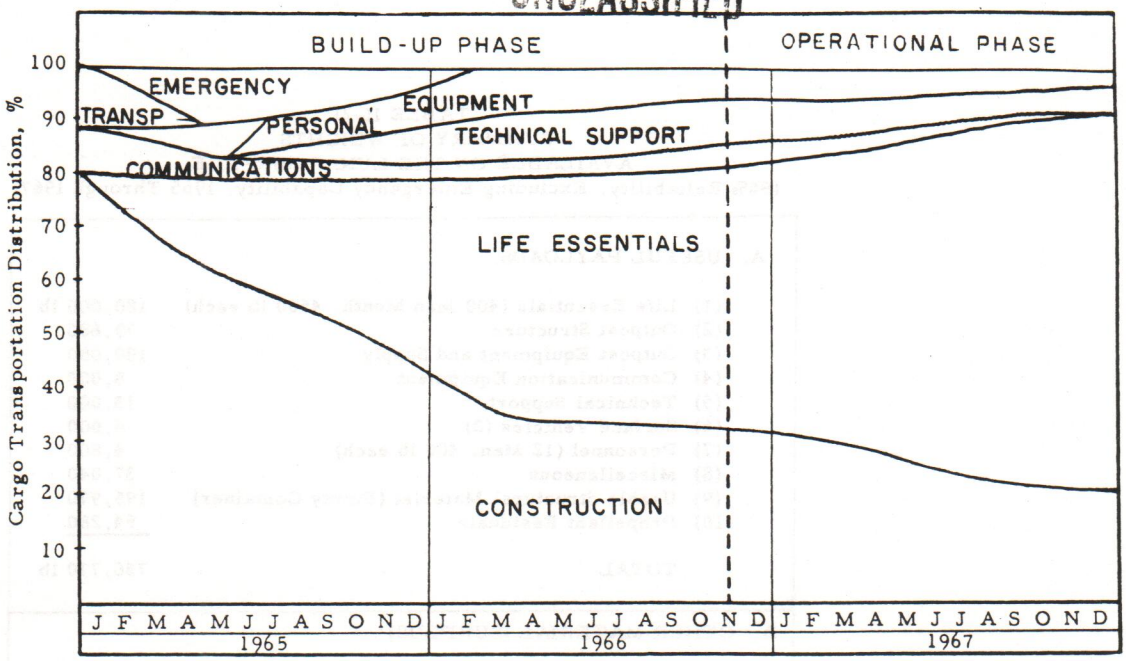


Fig. II-56. Supply Schedule for Direct Earth-to-Outpost Cargo Flights
Total Flights - 73
Total Cargo - 350,000 pounds

TABLE II-20
SUMMARY OF WEIGHTS OF MATERIAL TRANSPORTED TO THE LUNAR SURFACE (1965-1967)

| | | Supplies and Equipment (1) | Outpost Construction Material (2) | Surplus Second Class (3) | Constr. Mat. Third Class (4) | Surplus Instru. (G + C + I) (5) | Prop. Res. (50%) (6) | Total Useful Payload 1+2+3+6 | Total Mat. Landed | Ratio of Useful Tot. Mat. |
|---|---|---|---|---|---|---|---|---|---|---|
| A | Direct Route | 305,400 | 99,600 | 127,610 | 63,800 | 146,000 | 32,850 | 565,460 | 775,260 | 0.729 |
| B | Via Orbit Route (cargo) | 172,800 | | 38,900 | 19,500 | 8,800 | 10,000 | 221,700 | 250,000 | 0.887 |
| C | Via Orbit Route (Pers.) | 55,350 | | 78,450 | 39,200 | 8,500 | 25,000 | 158,800 | 206,500 | 0.769 |
| D | Scheduled Missions (Total) | 533,550 | 99,600 | 244,960 | 122,500 | 163,300 | 67,850 | 945,960 | 1,231,760 | 0.768 |
| E | Emergency Direct Route | 54,000 | | 18,500 | 9,200 | 20,000 | 4,500 | 77,000 | 106,200 | 0.725 |
| F | Grand Total | 587,550 | 99,600 | 263,460 | 131,700 | 183,300 | 72,350 | 1,022,960 | 1,337,960 | 0.787 |
| G | Exp. Del. Total Sched. Missions* | 426,840 | 79,680 | 195,970 | 98,000 | 130,640 | 54,280 | 756,770 | 985,410 | 0.768 |
| H | Exp. Del. Emergency Capab. | 43,200 | | 14,800 | 7,360 | 16,000 | 3,600 | 61,600 | 84,960 | 0.725 |
| | TOTAL | 470,040 | 79,680 | 210,770 | 105,360 | 146,640 | 57,880 | 818,370 | 1,070,370 | 0.787 |

*Eighty percent reliability.

UNCLASSIFIED
SECRET/CONFIDENTIAL

TABLE II-21
SUMMARY OF WEIGHTS
AVAILABLE ON THE LUNAR SURFACE
(80% Reliability, Excluding Emergency Capability, 1965 Through 1967)

| | |
|---|---|
| **A. USEFUL PAYLOADS:** | |
| (1) Life Essentials (400 Man Month, 4500 lb each) | 180,000 lb |
| (2) Outpost Structure | 79,680 |
| (3) Outpost Equipment and Supply | 180,000 |
| (4) Communication Equipment | 8,000 |
| (5) Technical Support | 13,000 |
| (6) Surface Vehicles (2) | 4,000 |
| (7) Personnel (12 Man, 400 lb each) | 4,800 |
| (8) Miscellaneous | 37,040 |
| (9) Usable Structural Material (Empty Container) | 195,970 |
| (10) Propellant Residuals | 54,280 |
| TOTAL | 756,770 lb |
| **B. OTHER MATERIAL (SURPLUS)** | |
| (1) Structural Components and Engines | 98,000 lb |
| (2) Guidance, Control and Instrument Equipment | 130,640 |
| TOTAL | 228,640 |
| Total Material on Lunar Surface (Scheduled Flights, 80 percent Reliability, | 985,410 lb |
| NOTE: (a) Nine vehicles, each 46,500 lb have returned to Earth during this time period. | (418,500 lb) |
| (b) Total Weight lost (20% Reliability) | (246,350 lb) |
| (c) Grand Total Lunar transportation capability (100% reliability, no emergency) | (1,650,260 lb) |

Sterilization will be accomplished by means of gas, chemical disinfectants and/or heat. For contingencies, it is planned to maintain all types of outbound cargo in some depth at the launch site.

In the following tables, life essentials (food, water, oxygen, and $CO_2$ absorbent) are calculated to be 15 pounds per man per day. In addition, a 70-man-month reserve at the outpost and a 15-day reserve at the orbital station are planned. Manned vehicles will carry a 14-day supply.

Tables II-20 and II-21 represent a good summary of the total weights involved. They identify the type of material as well as the route the material is taking. A reliability factor of 100 percent as well as 80 percent was used. The latter one is used for practical planning. The emergency capabilities, are honest and existing

SECRET
CONFIDENTIAL
UNCLASSIFIED

capabilities which, however, are for unforeseen requirements and thus should not be ear marked for certain payload items.

Table II-21 represents an overall summary of payloads.

UNCLASSIFIED
SECRET
CONFIDENTIAL

CONFIDENTIAL
SECRET
UNCLASSIFIED

# CHAPTER IV: COMMUNICATIONS ELECTRONICS

## A. INTRODUCTION

### 1. General Philosophy

The importance of communications to the establishment of a lunar outpost cannot be too heavily emphasized. The presence of human beings in this program makes communication reliability assume even larger importance in view of the implications of failure. For this reason, and because of the accelerated nature of the overall program, possible solutions to the many communications problems involved have been sought using reliable approaches which are consistent with the projected state-of-the-art. Early and continuing research and development of all items extending from basic materials to complete systems and subsystems has been planned so that advancements not now foreseen can be implemented within the time frame of the program on a continuing "product improvement" basis.

From an expedition control standpoint it has been considered that instantaneous and continuous voice communication from the lunar surface and enroute vehicle to various control areas on the surface of the earth is essential. Medical and psychological considerations further substantiate this decision. The plan for the communications portion of this program has, accordingly, followed this requirement with full cognizance of the global communication as well as the space communication factors involved.

In designing communications equipment and electronic components for a lunar environment, there are, of course, certain requirements that are obvious. For example, size and weight reduction, ruggedness, and high efficiency are design criteria which are axiomatic for this application. However, because of the unique requirements of a manned lunar station, reliability becomes the prime requisite. Component failure and the resulting period of trouble shooting and repair must be minimized to avoid breakdown of critical communication links. Included as a design goal will be the requirement for at least one year equipment operation without the need to replace components. This will require simplicity of mechanical and electronic circuit design, redundancy of critical components, and stringent component quality control programs.

Another important consideration is that of careful human engineering of equipment to permit proper operation within the physical and psy-



UNCLASSIFIED
CONFIDENTIAL
SECRET

chological limitations of the lunar environment. This will require coordination with medical, clothing, construction and transportation experts to permit the design of communication equipment as an integral part of space suits, shelters and vehicles.

## 2. System Discussion

The areas of interest covered in this chapter are summarized in Table II-22. The overall communication system will provide means for interconnection of the lunar outpost and selected terminals on earth. Figure II-57 depicts several elements of the overall communication portion of the project, and illustrates the basic scheme for maintaining continuous communication with vehicles in flight and the lunar outpost. Development of the earth communications satellite system is presently part of a separate program. The timing of the satellite program is consistent with the overall objectives of this program. Where possible, the earth-based lunarcom terminals will be located at or near the same sites selected for the ground-based surveillance complex, to simplify the global interconnection problem.

TABLE II-22

AREAS OF INTEREST IN COMMUNICATIONS AND ELECTRONICS

**EARTH-BASED COMPLEX**

**COMMUNICATIONS**

1. Lunarcom Terminal
2. Launch Site and Downrange Facilities
3. U. S. Control Center
4. Worldwide Communications Links between All of Above and and the Tracking Stations

**SURVEILLANCE**

1. Ground-Based Surveillance Complex

**LUNAR-BASED COMPLEX**

**COMMUNICATIONS**

1. Lunarcom Terminal (vehicle and outpost)
2. VHF Lunar Net System
3. Emergency Link
4. Terminal Facilities

**SURVEILLANCE**

1. Survey
2. Homing
3. Warning

UNCLASSIFIED
CONFIDENTIAL

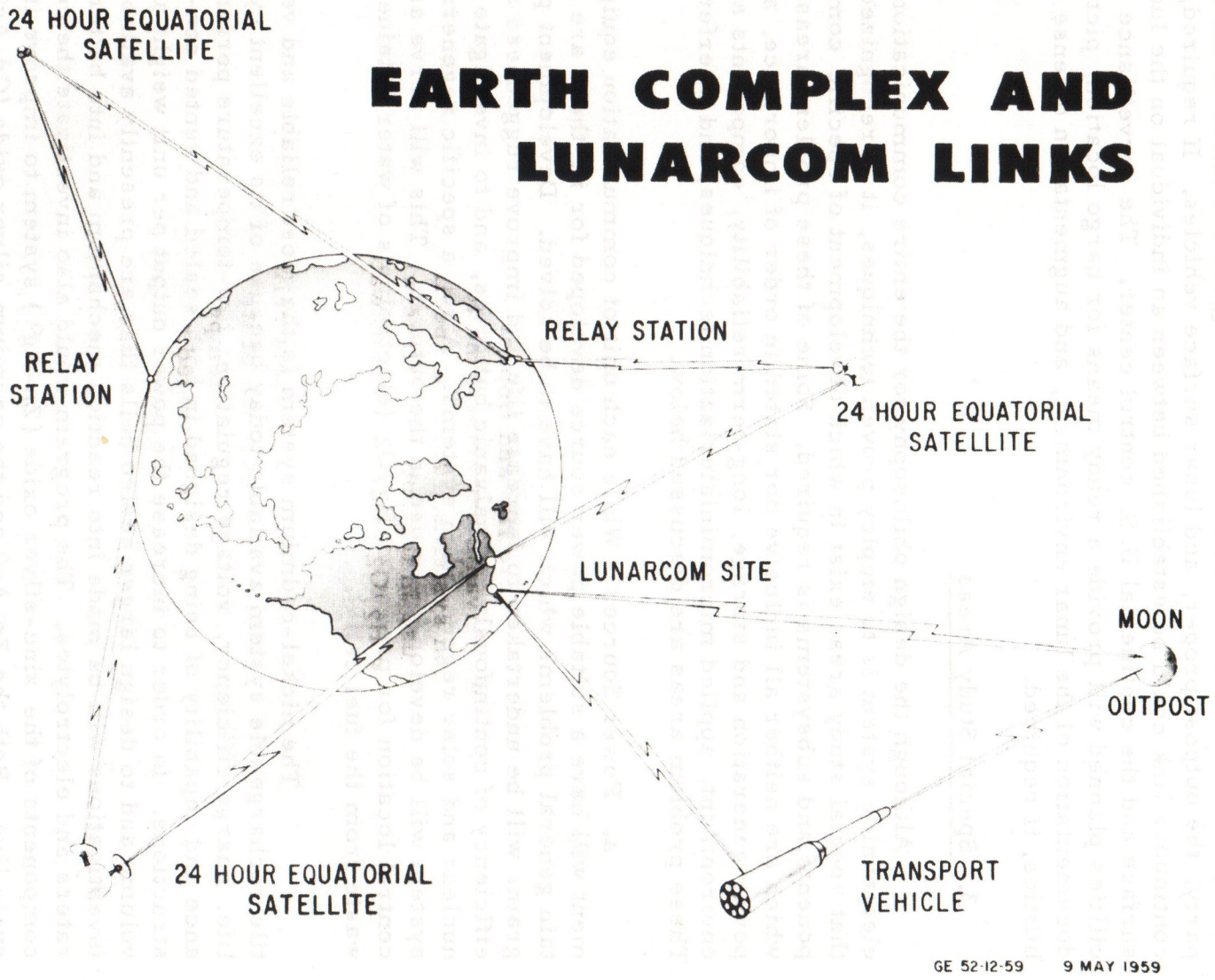


CONFIDENTIAL
UNCLASSIFIED

Fig. II-57. Earth Complex and Lunarcom Links

At the outpost, facilities have been planned to permit continuously available voice communications among each member of the lunar party, the outpost proper, and lunar surface vehicles. If required, a continuous link could be established between an individual on the lunar surface and the continental U. S. control center. The surveillance facilities planned will provide a ready means for cargo location, pictorial documentation of the lunar environment, and augmentation defense capabilities, if required.

3. Special Study Areas

Although the design philosophy for the entire communications electronics system is to employ proven techniques, it is recognized that special study areas exist in which development of specific components and subsystems is required. Some of these problem areas, which are neither all inclusive nor stated in order of importance, are: power generation and storage, long-term reliability, components and environment, applied microminiaturization techniques, and interference. These problem areas are discussed below.

a. Power Sources - While each unit of communication equipment will have a suitable power source developed for it, there are certain general problems which will have to be solved. Development programs will be undertaken to increase life and improve ruggedness and efficiency of continuously fed galvanic batteries, and to investigate nuclear and solar regeneration systems. Also, a specific regeneration system will be developed for use in the outpost. This will serve as a central location for producing $H_2/O_2$ (electrolysis of water obtained as waste from the fuel cells).

The nickel-cadmium system is the most reliable and versatile rechargeable system available today because of its excellent cycle life, charge efficiency, voltage regulation, low-temperature performance and capability of being designed in both sealed and vented constructions. In order to increase the power output per unit weight and volume and to design larger sealed cells than are presently available, investigations will be made into reaction mechanism and into battery raters and electrolytes. The program would also investigate the cell components of the zinc-silver oxide ($Zn-Ag^{O}$) system to improve its cycle live. Both the Zn-Ag0 and the cadmium-silver oxide (Cd-Ag0) systems would be studied to develop a sealed-cell design which would make a rechargeable cell available with higher power output.

Fuel cells will be designed for most of the equipment. However, it appears desirable to investigate the possibility of using the inherent temperature differential between the surface and subsurface of the moon for power generation. There are many design problems involved, but initial attention will be directed to investigating junction materials with high conversion efficiencies at very low temperature, and to obtaining effective heat transfer at hot and cold junctions. Much depends on information expected to be obtained from the lunar probes on the thermal conductivity of the surface of the moon and on the depth at which constant temperatures are obtained.

The thermoelectric battery, with a radioactive isotope source, is feasible and desirable where maximum energy is required with minimum size at moderate power levels. Investigation will be made of more suitable isotope sources for the thermoelectric-nuclear battery which have various ranges of lifetime and power levels. This would be done in conjunction with an existing AEC program in this area. The combination of these sources with more efficient thermoelectric conversion materials will result in a thermoelectric-nuclear battery having the advantages of long life, temperature independence, and high energy per unit of weight and volume.

b. Components and Materials - The extremes of temperature, encountered on the lunar surface and subsurface, present a formidable problem in the design of reliable electric circuitry operable over even a portion of the temperature range. Specific lunar equipment might be designed so that the active components are buried beneath the surface, requiring operation in ambient temperatures near $-40^{\circ}$ C rather than $+20^{\circ}$C. Antennas, antenna-supporting structures and many other structural materials must be carefully developed, consistent with the expected environmental extremes.

c. Micro-Module Program - Several million dollars have been obligated in the initial contractual phase of the micro-module production program. Through this effort a wide variety of micro-modules have been developed suitable for adaption to circuits ranging from audio to RF including digital computers and other switching applications. While most of these micro-modules will be usable in equipment designed for a lunar outpost, it will be necessary to examine the specific type of circuitry required and to construct experimental models. Overall system advantages to be gained by optimum application of micro-modules will be established in terms of size and weight reduction, increased reliability

through extensive redundancy and the inherently high reliability of appropriately designed functional micro-modules. Selected developmental models of equipment subassemblies will be constructed to demonstrate the advantages of the concept.

## B. COMMUNICATION REQUIREMENTS

### 1. Summary of Areas of Interest

The communication requirements of the project can logically be separated both by general time frame and area of usage. By 1962, ground communication support must be provided (by expanding existing facilities in some cases) at the launch site, at the downrange tracking and instrumentation stations, at the initial worldwide tracking and communications stations, and for interconnection among each of these as well as links to the control center in the Continental United States. These primary channels or "need lines" of communication are illustrated in Fig II-58. This is discussed in further detail in Section 2 below.

By the end of 1964, fully instrumented worldwide earth-based terminals are required for communication with vehicles in flight, the orbital station, and the lunar outpost. The interconnecting links among each of these, the world-tracking network and the control center will be expanded considerably. Development of all communication systems required for the lunar outpost will be completed and the multi-channel 24-hour communications satellite system (in circular equatorial orbit), which is currently under development on behalf of ARPA, will be integrated into the overall system. Figure II-59, which indicates the "need lines" of communication for the 1964 period, is discussed in Section 2. The integrated system is shown in Figure II-57.

Soft landings of both manned and unmanned vehicles are scheduled beginning in early 1965. This schedule dictates employment of the entire ground complex and all space and outpost communications systems on a continuing basis.

The ground complex buildup, in-flight requirements, outpost requirements and emergency communications requirements are described in detail in the following sections.

2. Earth-Based Complex - As stated above, communication facilities are required for a space vehicle launch site, tracking and communications stations located downrange and worldwide, an orbital station, and

SECRET
CONFIDENTIAL
UNCLASSIFIED

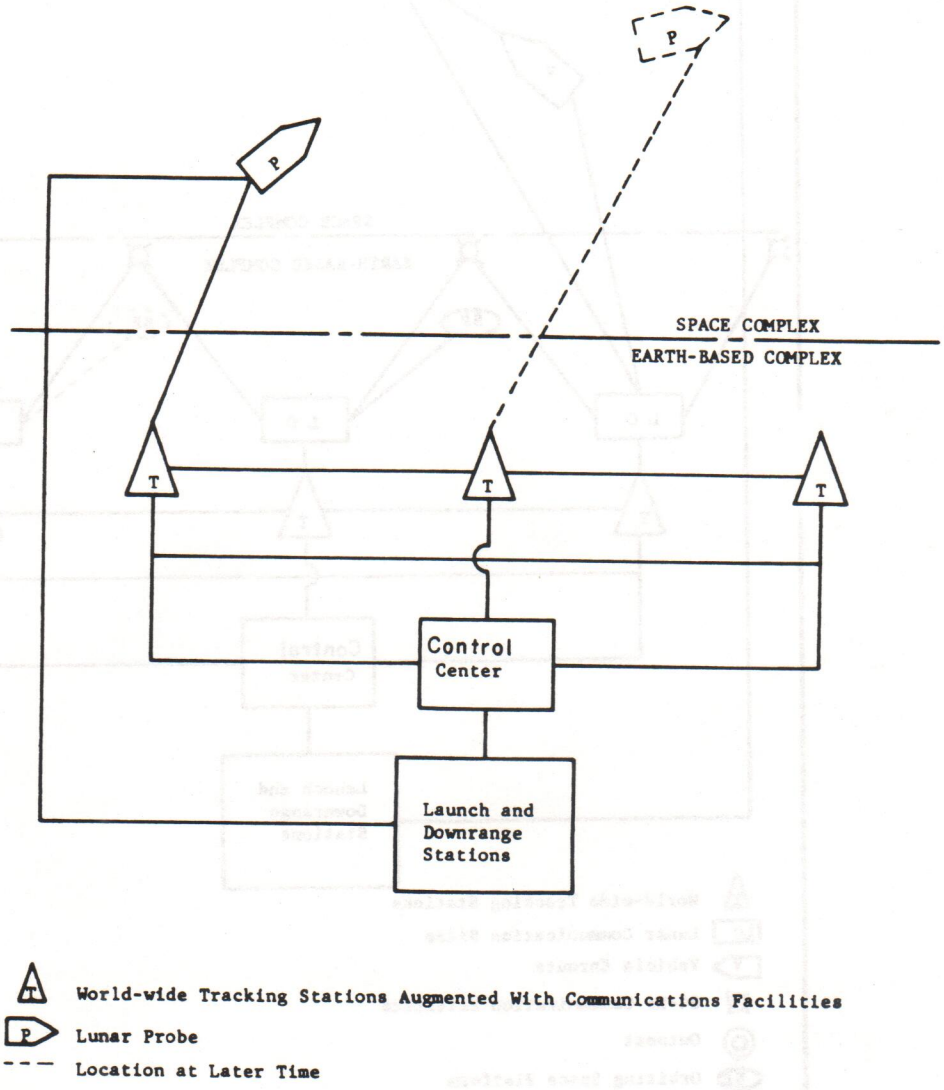


Fig. II-58. Communication Need Lines - 1962



UNCLASSIFIED
SECRET
CONFIDENTIAL

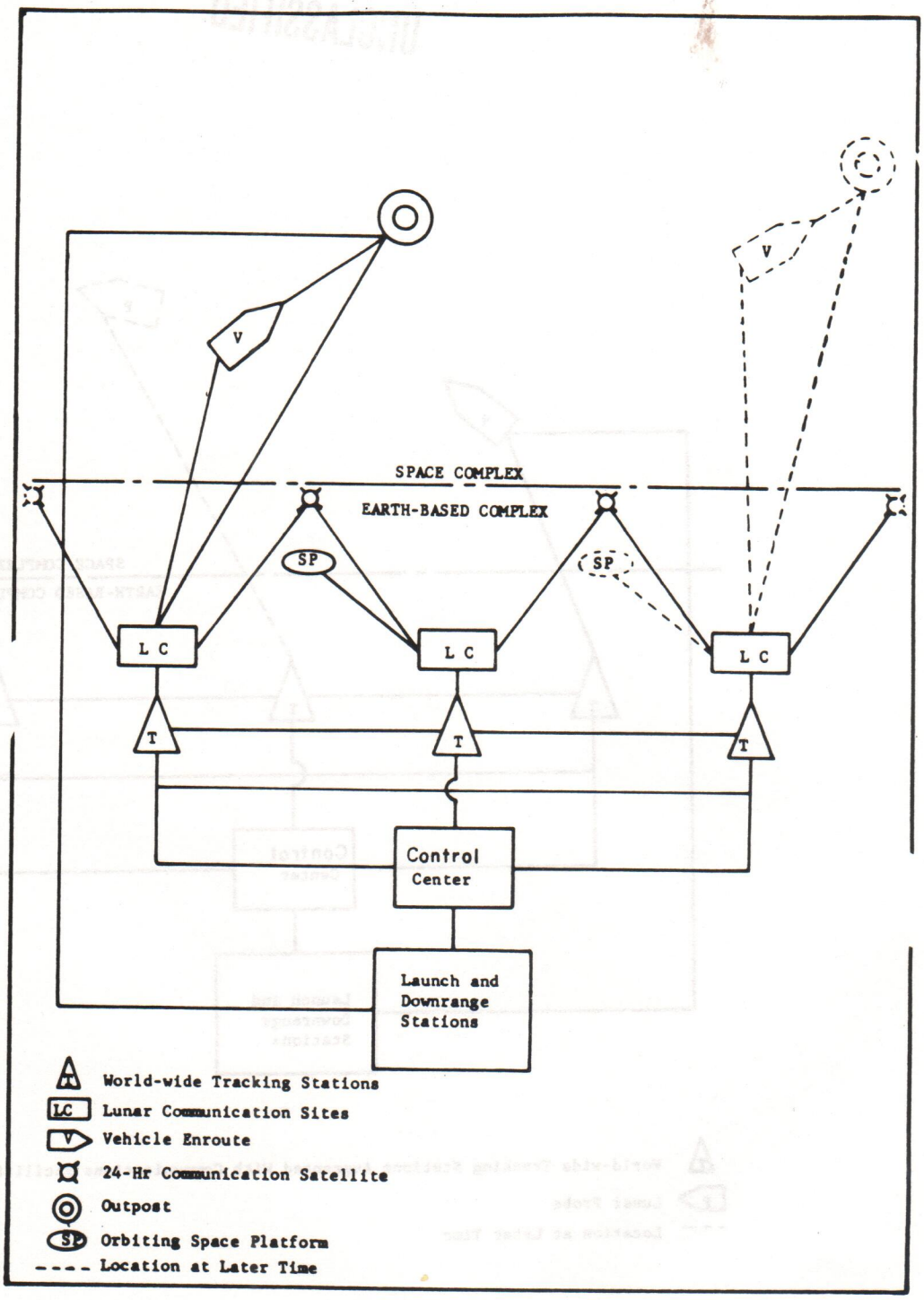


Fig. II-59. Communication Need Lines - 1964

an outpost on the moon. Facilities for intercommunication among each of these, with space vehicles in flight, and with the U. S. control center will be provided as an integral part of the system.

Figure II-60 is an artist's concept of a typical tracking station, which has a fourfold expansion capability, and is augmented by the auxiliary backup communications facilities, lunar communication station, orbital station and satellite ground link. For purposes of discussion, that portion of the station allied to communications with the lunar outpost or vehicles in flight is referred to on the lunarcom terminal.

For implementation, this study is divided into two parts. The target date for completion of the first part is the end of 1962 and, for the second part, the end of 1964. Existing and planned communications, utilizing known and proven techniques, are capable of meeting the general requirements of this project. Techniques and equipment now under development will enhance this capability. However, specific research and development programs are required in such areas as supercooled masers and parametric devices, transistors with greater power at higher frequencies, more efficient power sources, wide band tracking feeds, special anti-jam features, etc. Similar programs either have been initiated or will be in the near future; therefore, no major "breakthroughs" are required to provide the required communication capabilities.

a. Part One - 1962 Phase

(1) General Considerations

As indicated in Fig II-58, Communication Need Lines 1962, full time communications with lunar probe vehicles will be provided. The particular stations of the worldwide tracking net which are used in this system will be augmented by the necessary additional communications equipment. Extensive facilities will be provided in the ground complex for recording telemetry data. H-F (high frequency) circuits will be used to interconnect ground stations, while submarine cable and troop-scatter circuits will be used to interconnect downrange stations, depending upon their relative locations.

Although the world net tracking facility will be available for initial launchings to aid in tracking and communications, it may not be advisable to reply solely upon those stations presently selected as part of the world net for the later phases of the project.

Fig. II-60. Typical Tracking and Lunarcom Site

CONFIDENTIAL
UNCLASSIFIED

(2) Launch Area

A complete intercommunication system will be provided in the launch area. Details will not be given here because all these facilities are standard in nature.

(3) Downrange Tracking and Related Communications

The downrange locations for the command guidance system, required to track and communicate with the vehicle during its powered flight, have been considered for the launch area at Belem, Brazil or Christmas Island, located at $2^{\circ}$S and $2^{\circ}$N latitude, respectively. For the former location, the required system could consist of integrated tracking stations in Brazil (near Recife, for example) and at the launch area in the Ascension Islands to eliminate the requirement for a shipboard station in the Atlantic Ocean, and in Western Africa (in the vicinity of Liberia and the French Cameroons, for example). This is shown in Fig. II-61.

If Christmas Island is considered as the launch site, three of the five downrange tracking stations must be shipborne. Under such circumstances, submarine cable cannot be used, with a resulting reduction in reliability.

Each downrange site will include tracking facilities capable of automatically locking on and tracking the beacon transmitter for the command guidance system; a command guidance transmitter; data processing facilities for trajectory calculations; and associated communications equipment. The downrange tracking stations will be interconnected with a multi-channel communication system providing voice, teletype, and data communications on a highly reliable real-time basis. As noted on Fig. II-61, either a tropospheric scatter radio system or submarine cable would be used between stations, depending upon their relative locations. The latter, although quite costly, is the only means of providing the required degree of reliability by 1962.

(4) Worldwide Tracking and Related Communications

During 1960, the ARPA-NASA national ground-based surveillance complex (also referred to as the "world net") will become operational, and will be available for initial launchings. The complex is comprised of both primary and secondary tracking sites which are positioned to provide full-time communications with communications



UNCLASSIFIED
CONFIDENTIAL

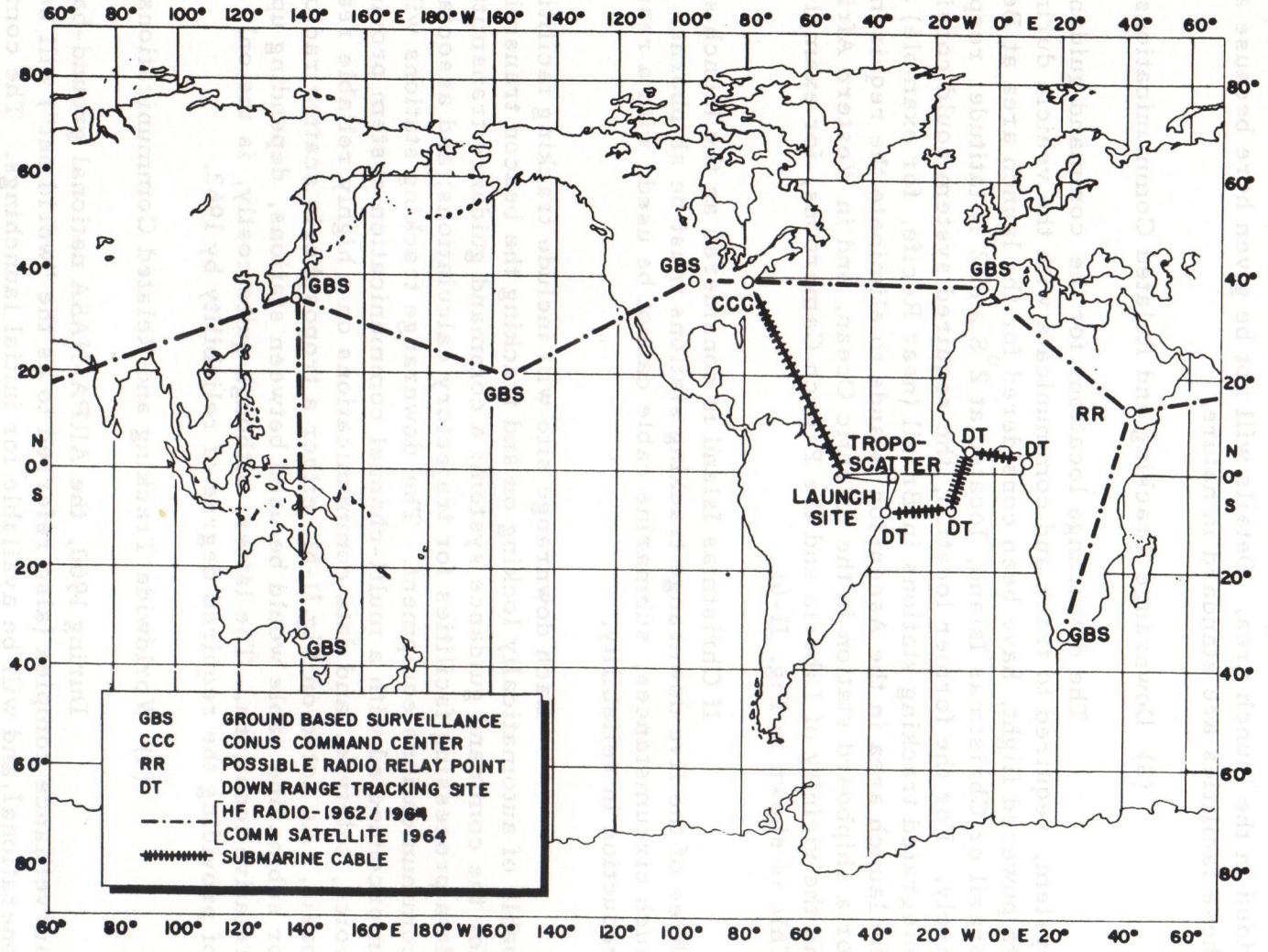


Fig. II-61. Earth Based Communication Complex

CONFIDENTIAL
UNCLASSIFIED

network and is under the control of a U. S. control center. It is not likely that the system could accommodate the workload imposed by a lunar expedition without considerable augmentation. Therefore, to support this effort, additional tracking and communication facilities will be provided by 1962 to permit full time communications with lunar probe vehicles. The channel provided to the inflight vehicle will be capable of accommodating voice bandwidth data transmissions to and from the U. S. control center. In addition, trajectory and positional data will be available throughout the network including the control center. For the 1962 phase, ground interstation communications will be provided by a multichannel H-F radio system, with its inherent reliability limitations.

Although this system will not provide the degree of reliability needed for manned flights, it should be adequate for the scientific probes. Thus, the tremendous cost for installation of submarine cable circuits cannot be justified. In the 1964 time frame, the marine 24-hour real-time communication satellites should become operational and can be used to provide the required reliability and capacity to support the ground surveillance complex.

It may be advisable to construct additional primary complexes in order to be able to maintain continuous communications with the outpost and the vehicles enroute, if more than one vehicle is underway simultaneously. These facilities will be augmented for this project. Each primary will be tied into the nearest global communications system terminal, and will eventually have a basic computer for reduction of data for transmittal to other primaries and to the U. S. complex. Each station will require two 85-foot parabolic reflectors, with Az-el (azimuth-elevation) mounts or equivalent.

Either a three-station or four-station system may be used to maintain continuous communications. A possible three-station arrangement might include Hawaii, Ceylon and Eastern Brazil (near Natal, for example); these stations are all located within 115-125° longitude of each other. A possible four-station arrangement might include Hawaii, Brazil (Belem, for example, at or near the launching site), the Philippines and Kenya. These stations are located within 72-110° longitude of each other. The selected stations, many of which are presently proposed as either primary or secondary sites in the world net, should be located as close as possible to the equator, to permit maximum communication time with the orbital station. This station is expected to orbit at a 307-nautical mile altitude (568 km) which severely limits the slant range.



UNCLASSIFIED
CONFIDENTIAL

b. Part Two - 1964 Phase

(1) General Considerations

As indicated in Fig. II-59, Communications Need Lines 1964, the earth-based complex will be expanded considerably as compared to the 1962 phase. Communications will now be provided for in-flight manned vehicles, the manned orbital station and the outpost, as well as expanded capacity between ground sites and incorporation of the communication satellite as a transmission medium. In addition, complete back-up, operational communications circuits (H-F links) will be provided between all ground stations.

(2) Launching Area, Downrange Sites, Tracking and Related Communications.

The launch and downrange tracking facilities provided in the initial installation are adequate to meet the 1964-1965 operations. However, the ground-based surveillance complex will require considerable expansion to simultaneously handle communications from the U. S. to several in-flight vehicles (voice and data channels on a full-time voice channel), and to the lunar outpost (full-time voice and data channels). In addition, positional data regarding all of these terminals will be available throughout the complex.

It is anticipated that the real-time communication satellite system will become operational in this time period, and will be used to provide reliable interstation communication. At the present time, the satellite system design is not frozen as to total number of satellites (i. e., three or four) or to location above the earth. Most probably, the ground inter-area repeater stations of the satellite communications system will be located approximately equidistantly, on land masses of friendly nations or under U. S. control. It is highly desirable to locate the tracking facilities, the inter-area repeaters, and the lunar communications equipment (discussed below) within close proximity of each other, to simplify inter-communications problems and to reduce logistics requirements.

For the purpose of this discussion, both the real-time satellite communication system and any orbital station or platform are considered part of the earth-based complex. The vehicle in flight and the outpost are considered to be the space complex. Since the orbital station will be in a relatively low orbit, with very limited time in view

of any ground station, it is proposed to permit ground communications with it for a short period during each 96-minute orbit as it passes over the selected station. The closer the station is to the equator, the longer the time it is in view from the orbital station. It is, therefore, proposed to make the launching site the communicating station. If additional ground sites are desired, such stations as Ceylon (8°N latitude), the Philippines (15°N latitude) or Puerto Rico (18°N latitude) may be used.

(3) Communications to Space Complex

Complete and continuous full duplex, real-time voice and data communications will be provided to the space platform and the lunar outpost. Communications between the outpost and the lunarcom terminals will be direct "line-of-sight" transmission when a particular lunarcom terminal and the moon are favorably located (i. e., in sight of each other). As the lunarcom terminal moves out of sight of the outpost due to rotation of the earth, communications with the outpost will be on a radio relay basis through an adjacent lunarcom terminal which next "views" the moon, and when required, through the satellite radio repeater system to the control center and launching site. All switching will be accomplished by the ground-based stations.

(4) Back-up Facilities

It should be emphasized again that complete back-up communications circuits will be installed and made operational between all ground stations in the complex and the U. S. control center. Communications and control problems in the complex will be simplified considerably with the advent of the world-wide communications network via the real-time communications satellite system and the group of radio relay stations on the earth. The backup facilities will provide alternate traffic routes of equal channel-handling capacity. Thus, the high-frequency radio links will serve as a continuously available back-up for the satellite communication relay system.

(5) Guidance Equipment

Earth-based electronic equipment used for control communications during mid-course guidance and tracking is discussed in detail in Chapter III A. 6 in this report. For purposes of communications planning, a radar control system has been assumed, although Doppler measurement techniques may also be applicable. Considering its peak power of several megawatts, the radar site should be located

as close as practicable to the remainder of the earth-based communications center (i.e., tracking station, lunar communications station, etc.). This will minimize the logistics and inter-communication requirements of the system.

3. In-Flight Systems

a. Basic Considerations

Up to this point, the portions of the communication complex which will provide a global coverage have been described with an indication of the operational or functional manner in which communications will be maintained, both with vehicles in flight and with equipment on the lunar surface. In describing this portion of the overall system more explicitly, some discussion is in order regarding the choice of operating radio frequencies for the lunar vehicle and lunar surface links.

The operation of such links requires propagation through the entire atmosphere, including the ionosphere, and thus must be well above the ionospheric penetration frequency at oblique incidence. In addition, cosmic noise from the galactic plane is appreciable at frequencies below about 400 mcs and would reduce the system performance of the lunar-to-earth path. Rotation of the plane of polarization by the ionosphere (Faraday rotation) can cause pronounced signal fading, but since this effect is inversely proportional to the square of the frequency, it becomes negligible for frequencies of 1000 mcs and higher and is not a determining factor for frequencies as low as 400 mcs. Refraction of the communication radio wave in both the troposphere and ionosphere can be neglected in this application for frequencies above 100 mcs. It, therefore, appears that frequencies above about 400 mcs are best for this application.

Considering now the other end of the frequency spectrum, oxygen and water vapor absorption of radio frequency power becomes significant at frequencies above 10,000 mcs. This serves to set a general upper frequency limit of around 10,000 mcs, which then defines the optimum range of frequencies to the 400 to 10,000 mcs spectra.

Several other limitations which have a bearing on the choice of frequency also serve to limit the spectrum under consideration. The first is the desirability of keeping the lunar-based equipment simple. In this regard, it is desirable that the antenna at the lunar end of the

lunar-earth link be fixed and require neither automatic or manual orientation to offset the lunar librations (approximately $\pm$ 3.5°). This then restricts the beamwidth and, hense, the gain of this antenna.

A second antenna consideration is that the ground antenna be kept to practical proportions and reasonable cost. Cost is governed both by overall size and allowable tolerance on slewing and pointing accuracy. Again, a restriction has been postulated which in effect limits the antenna beam-width and gain.

The result of the foregoing discussion as well as consideration of realizable system parameters and factors consistent with reliable long-life performance are indicated on Fig. II-62. As can be seen, the choice of operating frequency spectrum has been further reduced to approximately the 400 to 2500 mcs range. For the purpose of defining typical performance that can be expected, a nominal frequency of 1000 mcs has, therefore, been chosen for the earth-to-lunar vehicle and lunar surface communication links.

b. In-Flight Requirements

During a typical manned mission to the lunar surface from the orbital station, voice communications will be established and maintained between the vehicle and the U. S. control center or the launching site from take-off until completion of the flight. Typical system characteristics for the link which would provide this facility as well as the later lunar link are indicated in Tabld II-23 Communications between earth and the orbital station prior to departure from orbit will be provided by the facilities described in the preceding sections. During the flight time, one of the ground lunarcom stations will be in radio line-of-sight of the vehicle at all times; and as the earth rotates, the communication link connecting the vehicle to the control center will be switched to the next lunarcom station appearing over the horizon. This link will provide a command control means throughout the entire flight and will also permit continuous determination of many factors bearing on the physical and psychological aspects of manned space flight for prolonged distances and times.

One of the special considerations which is evident in providing this communication facility to the vehicle in flight is the requirement for a steerable antenna on the vehicle having a moderate amount of gain and directivity. During the midcourse unpowered flight phase, the vehicle may be oriented to minimize solar heating of the fuel and, as a result, the

CONFIDENTIAL

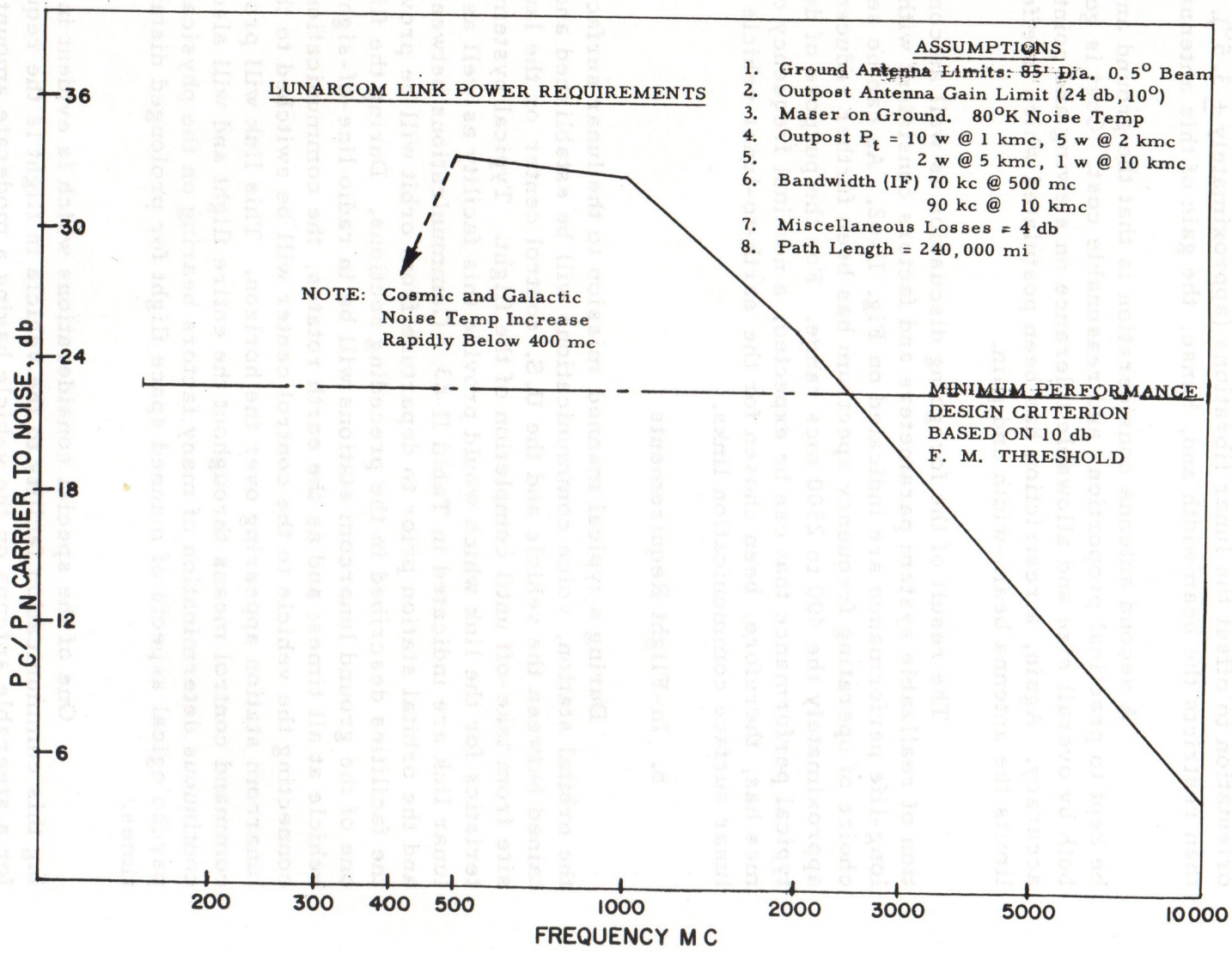


Fig. II-62. Outpost to Earth Path Carrier-to-Noise Power Ratio versus Carrier Frequency



CONFIDENTIAL

TABLE II-23

TYPICAL SYSTEM CHARACTERISTICS - LUNARCOM LINK

| Item | Earth Lunarcom Station | Vehicle | Lunar Outpost |
|---|---|---|---|
| Power Output in Watts | 10,000 | 10 | 10 |
| Antenna Configuration | 85 feet diameter paraboloid, steerable | Equivalent to 2 feet diameter paraboloid, steerable | Equivalent to 7 feet diameter paraboloid, fixed |
| Receiver Input Noise Temperature | 80°K | 2700°K | 2700°K |
| Margin Above FM Threshold | 34 db | 10 db | 20 db |

COMMON CHARACTERISTICS

| | |
|---|---|
| I-F Bandwidth | 72 kcs |
| Frequency | Nominal 1000 mcs |
| Path Lengtn | 240,000 statute miles |
| Type of Modulation | PCM - FM |
| Traffic Capacity | 40 kilobits/sec, binary; or one secure voice channel |
| Growth Potential | High definition television with security from Lunar outpost |

UNCLASSIFIED
CONFIDENTIAL

vehicle aspect as viewed from a lunarcom station will constantly change. Consequently, to be effective the vehicular antenna must be capable of being steered continuously. This facility, in conjunction with roll correction of the vehicle, will permit establishment of continuous communications.

It is anticipated that the power source for the communication link during flight, and for a period of probably 6 to 12 hours after the first manned soft landing has been achieved, will be by storage batteries. This weight has been included in the overall payload of the manned capsules. Following this period of 6 to 12 hours, a source of alternating current power will be available for communications as well as other facilities requiring power.

As soon as practical after landing on the lunar surface, the initial team of two men will install the seven foot diameter parabolic antenna or its equivalent to provide the needed additional margin in the link to earth. This antenna could be a collapsed metallic coated structure which is inflated and filled with a foam-type material which hardens after inflation, thereby providing a rigid structure. The mounting details for this assembly will be an uncomplicated design due to the absence of such factors as wind and ice loading, for example, but certainly must be consistent with the lunar environment.

Following installation of the antenna and the provision of A. C. power, continuous, reliable communications between equipment may be operated either from the vehicle or outpost shelters as they become available.

4. Lunar Based Systems

a. General Considerations

Primary reliance for communications between members of the lunar party will again be on a radio basis. After the initial landings, as both facilities and personnel increase, the radio communication facilities will also expand and wire transmission media will become useful. Again, the choice of operating frequencies deserves consideration.

In discussing possible frequency spectra for equipment to be operated on the lunar surface, in the time frame of this project, several points must be kept in mind. First, the lack of an atmosphere precludes point to point propagation enhancements by refraction, atmos-

pheric scattering and ionospheric reflections. Essentially, surface wave propagation with probably some diffraction effects will apply. The use of very low, medium, and high frequencies would probably be best from a propagation standpoint but the physical size of efficient, electronic circuitry and the antennas needed are not in consonance with the desirable design features of this program. In the VHF range, miniaturization techniques already exist and solid state devices with high reliability and small size have been developed. At higher ranges of the frequency spectrum, circuit efficiency tends to decrease and long-life active components become less available. This very brief summary indicates a preference for operation of the lunar surface equipment in the lower VHF spectrum. In the discussion of the various equipment that follows, operation at a nominal frequency of 50 mcs has been used.

b. Lunar VHF Net

Initially, communications on the lunar surface will be limited to small radio equipment integrated into the design of the lunar suits. These sets will be battery powered and, in addition to a voice communication capability, will incorporate several additional capabilities as shown in Table II-24. The first is a capability for location of cargo vehicles by detection and homing on the low power homing transmitter located in each cargo vehicle. This is described in some detail in the surveillance section below. The second feature is one which will have application following the establishment of the outpost facilities. Each of the man-packed sets will have a facility for continuous and immediate reception, on a common channel. This will permit broadcast type transmissions from the base outpost.

An example of the type of equipment that will fulfill these functions is described in Table II-25 and Fig. II-63. The AN/PRC-34 equipment pictured there is currently being delivered for use in both helmet radio and pouch-mounted, man-packed application. Development of improved techniques for this class of equipment is now underway in the current micro-module production program. The order of magnitude of size reduction is ably illustrated in Fig. II-64 for the man-packed equipment. These same techniques will be applied to other appropriate lunar-based equipments.

With the planned build-up of facilities, living quarters and surface transportation means at the lunar outpost, the requirement for greater talking range and different classes of equipment will accordingly increase. Within the time frame of the present project, no urgent

Table II-24*
TYPICAL SYSTEM CHARACTERISTICS - LUNAR MAN PACKED RADIO

| | |
|---|---|
| Power Output | 0.25 watts |
| Power Source | Nickel cadmium battery |
| Life (based on 20% transmit/receive ratio | 24 hours |
| Overall Weight (including batteries) | 6 pounds |
| Communication Range | 500 - 800 yards |
| Antenna | Vertical radiator |

* Includes homing capability for cargo location and personnel safety. Provision included for common channel, broadcast type reception.

requirements can be foreseen for switched communication, and net type operation appears satisfactory and adequate. The additional communication facilities applicable to this buildup of net facilities as well as the man packed-equipment are depicted in Fig. II-63.

This figure depicts the various equipment which are capable of being netted. The individual in the foreground is enroute to the cargo landing area while maintaining radio contact with the outpost. A lunar vehicle in the immediate background is in radio contract with the outpost and one of the lunar party. The outpost antenna is mounted on a lightweight mast to provide greater range and better coverage. Beyond the horizon and otherwise out of communication range of the outpost, another lunar vehicle is conducting an extended survey of the terrain while radio contact with the outpost is maintained by means of automatic, unattended radio repeater stations.

In general, continuously fed galvanic batteries (fuel cells) will be used to power individual equipment operating external to the outpost proper. The only exception to this will be the man-pack sets which will use sealed nickel-cadmium batteries designed to supply enough power to permit a man to communicate for 24 hours without returning to the outpost for a battery recharge. A similar situation

UNCLASSIFIED
CONFIDENTIAL

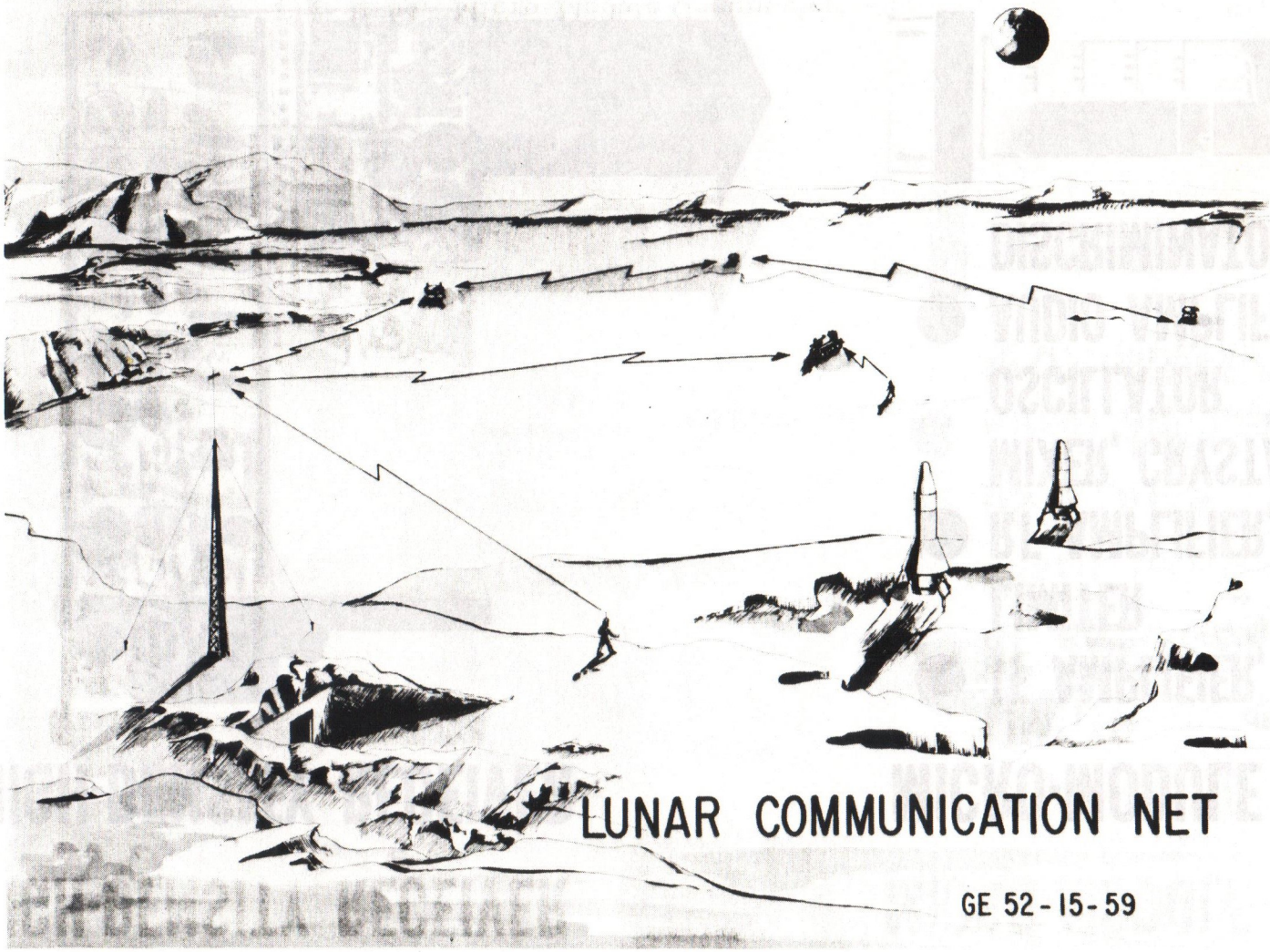


CONFIDENTIAL
UNCLASSIFIED

Fig. II- 63 Lunar Communication Net

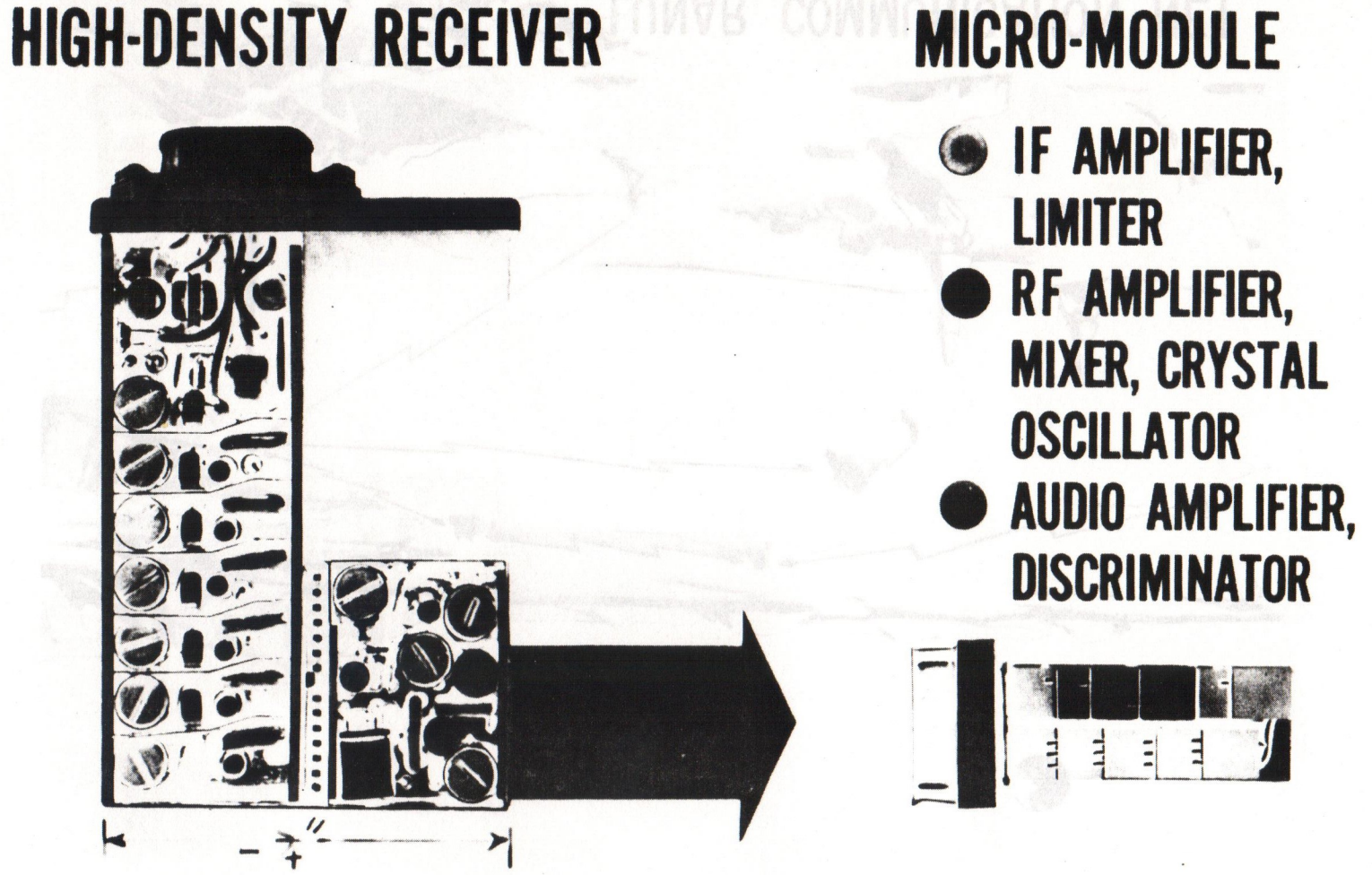


Fig. II-64. Micro-Module Communication Rece



CONFIDENTIAL

CONFIDENTIAL SECRET UNCLASSIFIED

TABLE II-25

TYPICAL SYSTEM CHARACTERISTICS - LUNAR MAN PACKED RADIO

| Item | Power Output in watts | Types of Power Sources | Communication Range | Estimated Wt Including Power in pounds | Special Features |
|---|---|---|---|---|---|
| Man Packed Radio | 0.25 | Nickel Cadmium Battery | 500-800 yards | 6 | Homing feature for cargo or Base Station location |
| Vehicular Radio | 10.0 | Nickel Cadmium Battery | 5-10 miles | 100 | Operates from battery supply other than vehicular drive power |
| Base Station | 100.0 | 115V/400 cps | 15-30 miles | N/A | Includes direction finding capability for cargo and personnel location |
| Automatic Repeater | 2.0 | Fuel Cells | 1-3 miles | 30 | Basic unit capable of 24-hr operation. Extended service possible with solar cell kit |

TABLE II-26

TYPICAL SYSTEM CHARACTERISTICS - EMERGENCY LINK

| ITEM | LUNAR BASED | EARTH BASED |
|---|---|---|
| Power | 10 w | 100 w |
| Power Source | Fuel Cells | 115V AC |
| Activation Time | Instantaneous | |
| Estimated Weight | 15 pounds | 200 pounds |
| Antenna | Dipole | Helical Array (10 db gain) |
| Type of Modulation | CW (Morse or pre-set code) | Coded Reply (Acknowledgement) |
| Nominal Frequency | 100 megacycles | 100 megacycles |

NOTE: Basic lunar unit capable of storage on lunar surface, day or night, for 24 hours. A 20 pound kit, including solar cells and nickel cadmium storage cells, provides indefinite storage including lunar day and night periods.

UNCLASSIFIED CONFIDENTIAL SECRET

will exist for the fuel cell powered equipment. Each equipment will be provided with enough fuel to last expected operating time or a length of time sufficient to permit a schedule replacement of fuel.

The fuel will consist of hydrogen and oxygen stored under pressure in liquid form. This will be converted to water in the fuel cell and the water will be collected in a separate container as the waste product. At the same time new fuel is added to the fuel cell, the water will be collected and returned to the outpost for regeneration by high pressure electrolysis into hydrogen and oxygen. A summation of pertinent characteristics for each of the equipments comprising the lunar net system is contained in Table II-25.

c. Emergency Communication System

One remaining item of communication equipment which is of vital importance to the individuals who will make up the lunar party has yet to be discussed. This is the emergency communication equipment which will permit an individual to signal that he is in distress, to roughly indicate the cause for alarm, and provide some acknowledgement that his message has been received. The equipment which has been conceived to fulfill this requirement is outlined in Table II-26. Basically, it will consist of a fuel cell powered radio transmitter and receiver, a collapsible dipole antenna means for sending a number of prearranged coded messages or morse code type signals. A kit of solar cells and nickel cadmium batteries will be provided to enable the equipment to be left on the lunar surface for a period of time extending through the two-week lunar night. The purpose of this kit is to provide the small amount of heat needed to keep the insulated fuel cells at 20°C and ready for instantaneous activation as the power source. These units will be placed at likely locations within and without the outpost and vehicle environments, ready for use if needed.

The choice of a nominal frequency of 100 mcs has been based primarily on one consideration, that of the large amount of receiving equipment near this frequency at points over the entire earth's surface. It seems logical that consideration should be given by the U. S. government, if it has not already been done, to propose agreement on an international basis of a common distress frequency for space exploration, such as the now monitored 490-510 kcs band for maritime distress calls.

d. Expansion Capability

With stabilization of the lunar outpost and the establishment

SECRET/CONFIDENTIAL
UNCLASSIFIED

of semi-permanent outlying areas for research, further exploration, etc., the use of lightweight field wire may supply excellent communication transmission facility. This wire will be capable of transmission without repeaters for distances of 25 miles, weight not more than 15 pounds per mile and be packaged such that it could be payed out by a lunar-suited human being. Within the confines of the outpost proper, a modest auto matic data processing terminal will be provided for multi-purpose use such as cargo cataloging, collection and storage of technical information for relaying to earth and conversion of analog imputs to suitable digital signals. This equipment will be compatible on a digital basis with the lunarcom link and its associated equipment.

From a growth potential standpoint beyond the present program, the communication system requirements will depend primarily on the growth pattern both in personnel strength and area of operation of the outpost. Should explorations to the far side of the moon be undertaken, for example, serious consideration must be given to means, such as a lunar satellite communication system, for extending the communication capability presently considered. A marked increase in the number of personnel in the lunar party will probably justify the expansion of the lunar outpost facility to an automatic, switched telephone system. Full time TV coverage from the lunar surface to the earth control center may become a firm requirement. Fig. II-65 indicates the radiated power required to provide commercial quality, television transmission from the lunar surface to earth over the lunarcom facility. For purposes of comparison, the required power for other types of signals has also been indicated in this figure. These are only a few possibilities; certainly a great many more exist. With careful, continued planning, and an accompanying consistent research and development program, the greatest possible success in meeting these ever increasing requirements will be assured.

## C. SURVEILLANCE REQUIREMENTS

### 1. Summary of Areas of Interest

The general surveillance requirements can be separated into three major areas of interest: survey techniques and equipment, homing methods and equipment, and lunar warning capabilities.

For survey systems, it is proposed to provide the lunar party with distance-measuring equipment, both visual (e. g. photographic) and electronic ranging equipment. Homing facilities include various



UNCLASSIFIED
SECRET/CONFIDENTIAL

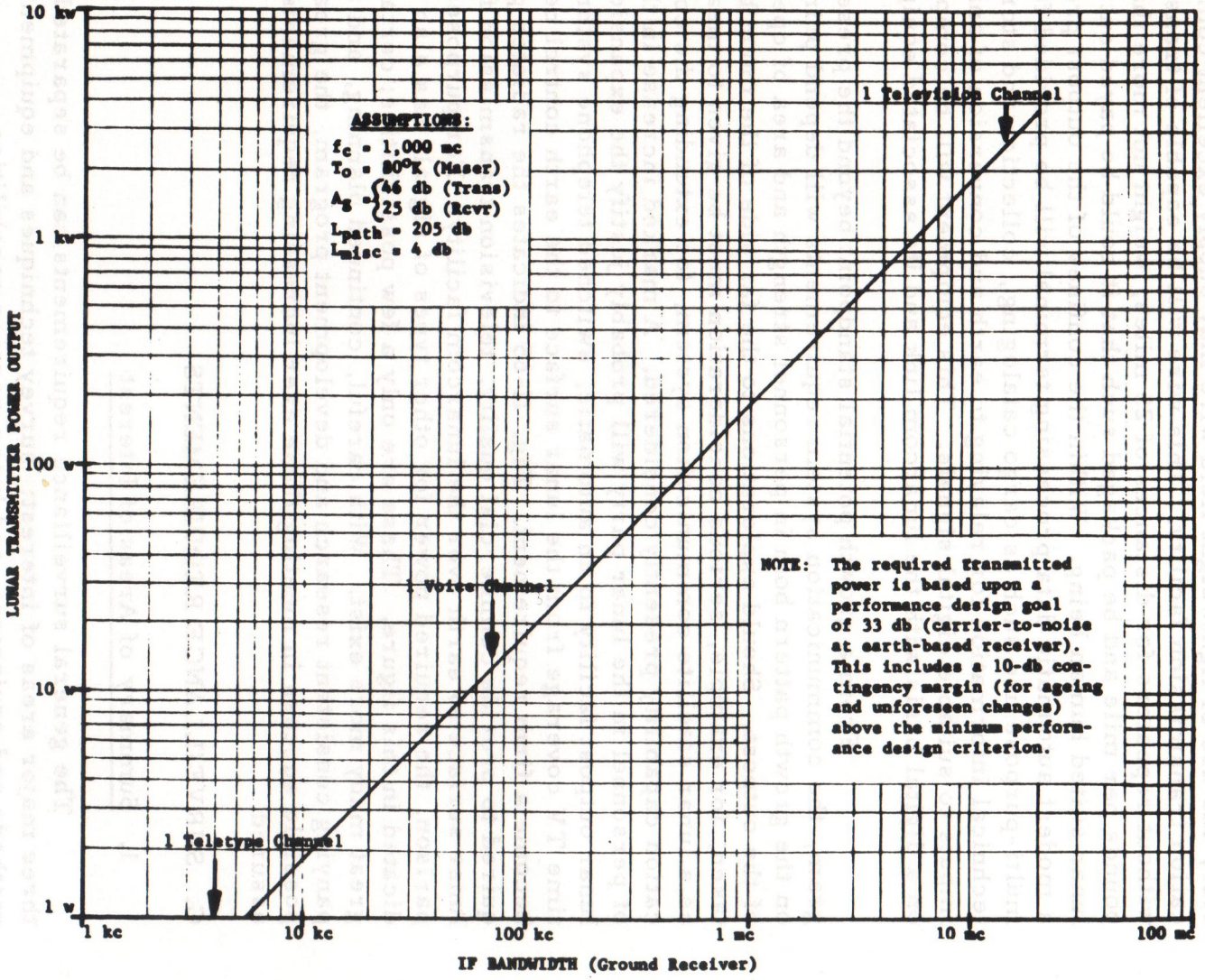


Fig. II-65. Radiated Power Required for Lunar-Earth TV

location devices, both electronic and passive visual systems (e. g. special flares), for location of objects and human beings. Lunar warning systems will include electronic intelligence receivers for detection capability, and radar systems. The characteristics of these devices are summarized in Table II-27.

The full surveillance capability would not be provided completely for the first landing party, but will be phased during the project. The first landing party will receive equipment closely associated with survival, with getting important information back to earth, and with safety and detecting the presence of other landing parties. The later landing parties will be concerned with collection of supplies, construction work, and wider ranging explorations. The members of the party will be provided with visual means of communication for use in case of battery failure and to conserve battery supplies. Visual signalling could be in the form of simple heliographs, arm signals, or semaphores.

2. Survey Systems

During survey operations, visual observation can be accomplished by photographic, facsimile and television techniques, as well as miniaturized electronic ranging equipment. Information gathered will be compatible with equipment used for transmission to ground-based stations via the lunarcom link. The camera equipment that is employed may be of the polaroid type, requiring only that the exposed film be processed within the controlled environment. This picture will then be scanned by an electronic scanning device, converted to digital form suitable for transmission over the lunarcom link, and relayed to the earth stations. It is estimated that 20 pounds of film provide approximately 4000 pictures. Sufficient sensitivity will be included in the camera design to preclude the use of flash attachments in the expected bright lunar nights. By means of this equipment, a pictorial documentation of the lunar party's experiences will be available on a continuous basis.

The availability of television type transmissions from the lunar surface will follow somewhat later in the scheduling of activities from the lunar surface in view of the considerable radiated power required. Approximately three kilowatts of radiated power is required for the transmission of commercial quality pictures over the lunarcom link. The input power requirements for this feature place the availability of T V in a time frame consistent with the establishment of the full outpost facility. It should also be realized that TV transmissions will not be on a continuous 24-hour per day basis to the control center since this would require

Table II-27
TYPICAL CHARACTERISTICS - LUNAR SURVEILLANCE DEVICES

| Item | Weight (lb) | Power Source | Special Features |
|---|---|---|---|
| | | SURVEY | |
| Camera | 1 | Battery | High acuity, day/night capability, 55 shots, 70 mm, load |
| Film Processor & Scanner Converter | 50 | 115V/400 cps | Provide digital signal for transmission over the Lunarcom link |
| Television Pickup & Receiver | 150 | 115V/400 cps | Commercial quality image |
| Television Power Amp | 900 | 115V/400 cps | Provide 3 KW power at 1 Kmc |
| Distance Measuring Equipment | 25 | Battery | Accuracy 3 parts/million ± 1 cm; maximum range 30 km |
| | | HOMING | |
| Special smoke flares, Paints, etc. | | | Part of Lunar vehicle |
| Homing Beacon Activator (Manned vehicle or Base Station) | 4 | Battery or 115/400 cps | Supplies addressed signal for cargo vehicle homing beacon operation |
| VHF Homing Beacon (Cargo Vehicle) | 5 | Battery | Will operate in standby for periods up to 6 months |
| | | WARNING | |
| Radar | 150 | 115/400 cps | Range: Vehicles, 20,000 yd; walking man, 1000 yd |
| Electronic Intelligence Receiver | 60 | 115/400 cps | Wide band HF, VHF & UHF coverage |

CONFIDENTIAL
UNCLASSIFIED

a worldwide video relaying capability. Transmissions to the U. S. would either be timed to coincide with radio line of sight conditions to a lunarcom site located at a point where video transmission facilities exist, or, if time were not an overriding factor, the transmissions could be received at any of the lunarcom sites, stored on tape and subsequently forwarded by means other than a video facility.

A capability for reception of TV transmissions at the lunar outpost from earth will be provided as required. From a medical standpoint, the psychological stimulus afforded by permitting members of the lunar party to see their families might well justify the inclusion of this capability at an early date in the program.

Completely transistorized, miniaturized, battery-operated electronic ranging or distance measuring equipment for surveying purposes will also be provided. One particular system capable of development in the time of this program, uses CW operation and determines range by utilizing phase information derived from frequency modulation of the X-band carrier.

3. Homing Systems

A very important facility that must be available to members of the lunar party is their ability to locate cargo vehicles quickly and accurately, bearing in mind the restrictions placed on their movements by the lunar suits. Also, a capability is required for directing them to the outpost following suited ventures on the lunar surface. Bright outside colors will be very useful in this respect.

In addition to the various visual devices which will be used, a capability for homing on a signal source of the proper frequency will be provided as part of the VHF man-packed radio contained in the lunar suit. This device will not only permit the man to home on cargo vehicles, but also will permit him to home on the VHF transmitter at the outpost, and thereby provide a radio beacon direction.

It is planned that each vehicle landed on the lunar surface will contain a homing activator receiver, operating in the HF region, which, when properly interrogated by an addressed signal, would then turn on the homing transmitter mentioned above. Since a number of the battery operated homing activator receivers are expected to remain operable for periods of several months during the early 1965 period prior to the first manned landing, battery saver circuits with long duty cycles (e. g. 100 to

UNCLASSIFIED
CONFIDENTIAL

1) will be incorporated in the design. Each manned vehicle will include the necessary homing activator transmitter circuitry.

4. Lunar Warning Systems

A number of warning devices potentially suitable for use in the lunar environment have been considered with the conclusion that if ever required, the radar and electronic intelligence type systems show the most promise. Although primarily these systems would be used for security if future development so dictate, their value for safety and survival is apparent. In addition, there is the added psychological benefit to the lunar party of being able to detect and identify rapidly approaching objects.

Considerable work has already been accomplished in the development of small radar equipment which, with moderate redesign, will be adaptable to the lunar environment. These devices will be capable of providing either an aural or visual alarm on a remote operation basis for distances up to two miles. An active infrared, anti-intrusion device will also aid in providing local security. With this device, an active infrared source is used in conjunction with retro-directive mirrors. Range, with the sources considered applicable for lunar purposes, is on the order of 400-500 yards.

Finally, electronic intelligence receiving equipment capable of turning extremely wide frequency ranges will be provided to permit monitoring of electromagnetic radiations.

## (S) CHAPTER V: LAUNCH SITE

### A. REQUIREMENT

A survey was made of the two major U. S. launch sites, the Atlantic Missile Range and the Pacific Missile Range to determine their adequacy to accomplish Project HORIZON. The results of this survey indicated very clearly, based on their respective future plans and forecasted capabilities, that neither could handle the launch site requirements of this project. Based on this conclusion, as well as other technical reasons which make AMR and PMR undesirable sites, a study was conducted to determine the most desirable location for a new launch site. Various locations, within the U. S. and outside the continental limits, were considered together with technical and supporting considerations. As a result of this study, it was determined that an equatorial launch site is economically feasible and considered technically desirable for this project. Such a facility would materially enhance the capabilities of the U. S. in space flight for all operations. Considering anticipated space flight missions, such as the establishment of an orbital station or space platform, an equatorial communication satellite system, and other missions requiring either an equatorial orbit or rendezvous capability, the desirability for an equatorial launch site is plainly evident. If Project HORIZON was the only mission under consideration, it alone could justify an establishment of an equatorial site. The accomplishment of this mission from other than an equatorial site could create undesirable technical complications in flight mechanics as well as increase the space transportation system cost.

Fueling of orbital-launched vehicles requires precise control for rendezvous even in an equatorial orbit. Rendezvous in orbits, other than near equatorial, is more complex and costly. Equatorial satellites may be necessary to maintain uninterrupted communications with the outpost. Equatorially-launched direct flights from earth to moon alone may save enough to offset the fixed installation costs. Also, for the SATURN II vehicle , preliminary computations indicate that direct flights can be accomplished from non-equatorial sites only during several periods of time which total, at most, 15 days per month. This would severly hinder accomplishment of this program inasmuch as rescue and emergency flights would not be possible during at least half of the month. It is, therefore, concluded that an equatorial launch site, located within $2\frac{1}{2}°$ of the equator, is technically desirable for a program of establishment of a lunar outpost as discussed herein. Based on this conclusion, it has been assumed that an equatorial launch site will be established as part of Project HORIZON. It should be understood,

however, that advances in the state-of-the-art on such items as orbital rendezvous may relax the launch site location requirements to something greater than $+2\frac{1}{2}°$ from the equator.

## B. GENERAL CRITERIA FOR LAUNCH SITE SELECTION

Selection of an equatorial launch site capable of meeting the mission requirements of this program should be based on the following general criteria:

1. Open water should extend to about 1500 miles downrange for booster recovery or impact of second stage. In the event of an aborted flight, water is necessary to accomplish emergency recovery. Consideration should be given to the fact that booster fallout range of SATURN I is about 300 miles and that for SATURN II 100 miles. Second stage fallout range is about 4000 miles and 1500 miles, respectively.

2. Eastward launchings should be possible to most fully utilize the velocity of the earth's rotation.

3. Site should be of sufficient size to permit future growth, i.e. installation enlargement and accomodation of larger vehicles. Remote launchings of nuclear powered vehicles require considerable safety distances, and should be considered.

4. Site should have adequate azimuth traverse to permit daily launchings. For continuous capability for a lunar mission, 30 degrees azimuth traverse north and south of east would be desirable for the current SATURN II configuration. In addition, it would be desirable to be able to accomplish polar firings as well.

5. The area downrange should include areas of land, sufficient in size for installation of tracking facilities. Utilization of already existent facilities downrange would be preferable.

6. Proximity to the U. S. is desirable to reduce construction costs and logistics support requirements.

7. An area free from extreme climatic conditions is essential in that "holds" on some missions cannot be permitted for extensive periods. Also, climate is important in personnel recruitment maintenance of the installation, and maintaining continuity of operations.

8. The area selected for the launching site should preferably be obtainable for exclusive use by the United States for an extended period of time. Acquiring the site in conjunction with the U. S. Foreign Aid Program should be considered.

SECRET CONFIDENTIAL
UNCLASSIFIED

9. The site may require security which can be furnished by a reasonable sized task force of the Navy, Air Force, and Army should the necessity arise.

10. The sea-traffic in the ocean area in downrange direction should be modest to reduce interference with the flight schedule.

Many other factors such as soil characteristics, altitude, water supply, labor forces, local construction materials, personnel recruitment, etc. must be weighed in site selection.

In view of the above, areas which were considered are: the far Pacific, the eastern coast of Africa, the near Pacific, and the eastern coast of South America.

The final launch site selection should be the best compromise of all factors, providing it affords the capability of accomplishing the mission under consideration at the present in the minimum time.

## C. LAUNCH SITE OPERATIONS

### 1. Receipt and Storage of Supplies

Equipment and supplies utilized at the launch site are of three types: (1) those required for delivery to either the orbital station or the lunar outpost, (2) those required to support technical operations at the launch site, and (3) those required for community support of the launch site.

Equipment and supplies required for delivery to either the orbital station or the lunar outpost, including the delivery vehicles themselves, will be received from the U. S. in accordance with established launching schedules and loading plans. Such equipment and supplies normally will not be placed in storage, but will be delivered directly to the appropriate technical support operation for assembly, checkout, sterilization, and packaging as applicable prior to launching.

Each technical support operation will maintain sufficient reserves of repair parts, assemblies, sub-assemblies, and supplies as required to preclude postponement of scheduled launchings due to lack thereof. Sufficient supplies and equipment will be maintained on hand to permit expeditious launching of emergency vehicles. Refinements of these procedures will be made possible by the greater frequency (and consequently more routine nature) of the launching.

Equipment and supplies required to support technical support operations will fall into two categories: (1) standard items stocked in the U. S. utilizing a depot-type system, and (2) items peculiar to this


UNCLASSIFIED SECRET CONFIDENTIAL

program and procured exclusively for use at the launch site. Such equipment and supplies will be delivered directly to the technical support operation at the launch site.

A 45-day stockage objective of equipment and supplies (above) for which there is a foreseeable recurring demand will be maintained at each technical support operation. Replenishment requisitions to replace items used will be submitted on a regular basis.

A sufficient reserve of essential supplies and equipment for which a recurring demand cannot be foreseen will be maintained by each technical support operation to preclude possible delay of launchings. Special requisitions to replace items used will be submitted concurrently with the issue of such items.

Procedures to be followed for the receipt of these items will be the same as those currently followed for any normal "ear-marked" shipment. Procedures to be followed for storage of these items are the same as those currently prescribed for any operational installation located in the tropics.

Equipment and supplies required for community support comprise standard items, none of which will be required exclusively for this operation. The receipt, storage, and issue of these items will present no problems that have not been successfully solved at existing isolated tropical bases.

2. Launch Site Operations

A schematic flow diagram showing typical launching site functional layout and operations is given in Fig. II-66. This depicts the routing of the hardware components, propellants, payloads and passengers of a space flight vehicle from arrival at the equatorial site up to time of launching. These procedures would be essentially the same regardless of site location.

The booster is unloaded from sea transport barge at dockside. If it is a booster recovered from a previous launching, it will first be transferred to an assembly building for rejuvenation. A new booster will be transported directly to the staging building.

The booster recovery scheme which will be used on the SATURN vehicles is shown in Fig. II-67. This scheme is an outgrowth of the successful JUPITER nose cone recovery program. The recovery system is composed of parachutes and retro-rockets to lower the impact velocity. Once the booster is in the water, a modified LSD will be used for the actual recovery. Figure II-68 illustrates the floating of the booster

CONFIDENTIAL
UNCLASSIFIED

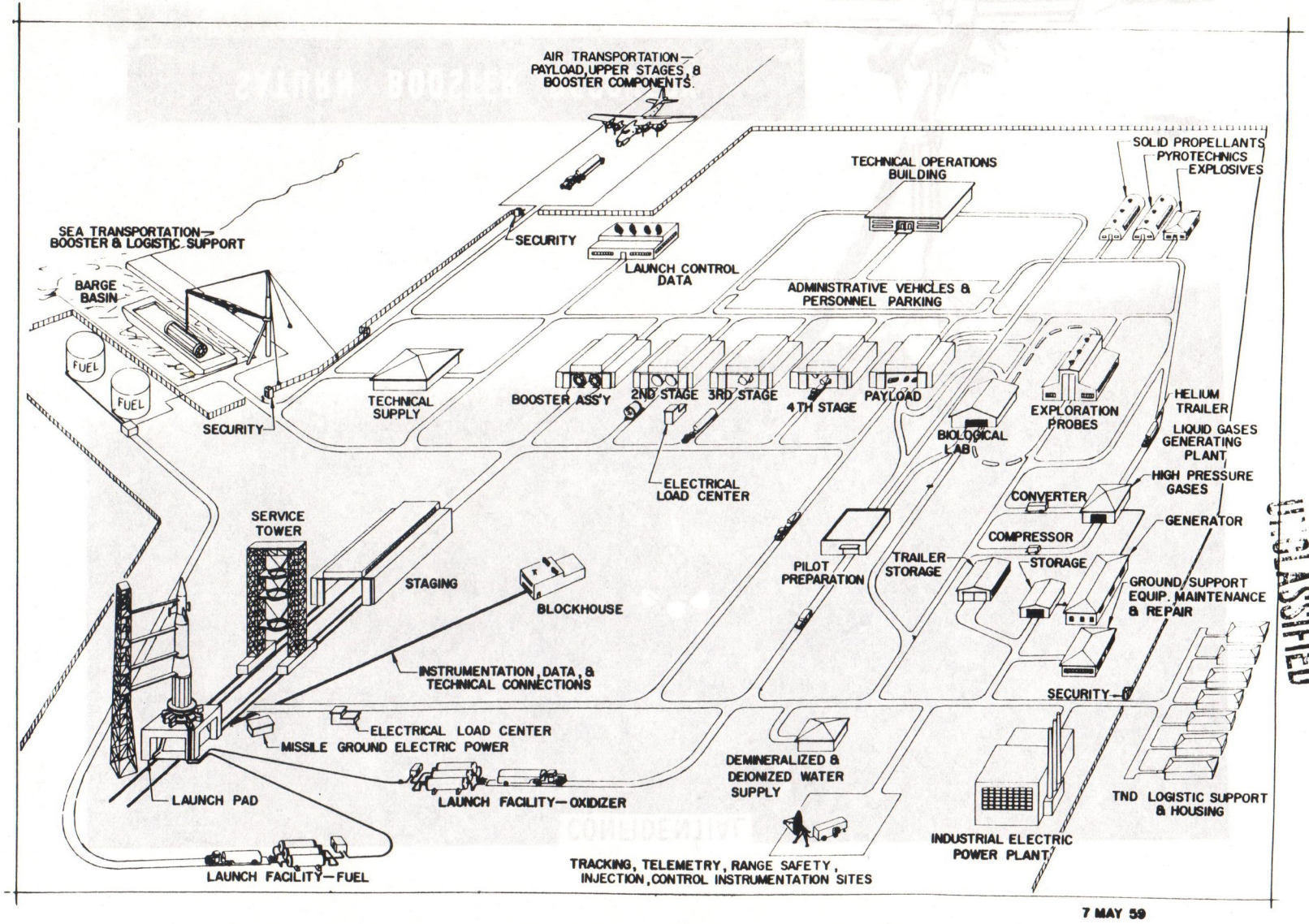


Fig. II-66. Schematic Flow Diagram of Launch Site

CONFIDENTIAL
UNCLASSIFIED

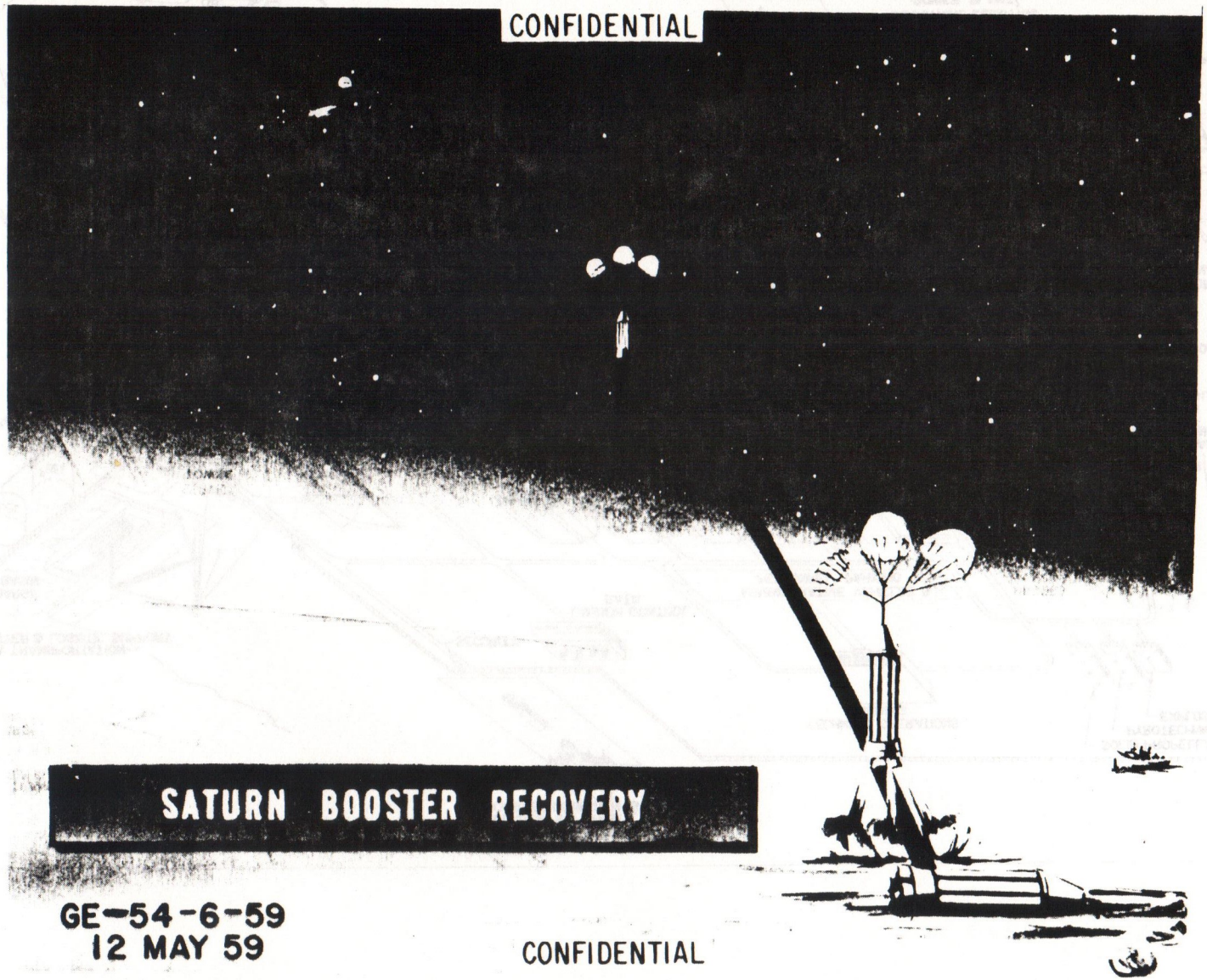


Fig. II-67. SATURN Booster Recovery

SECRET CONFIDENTIAL UNCLASSIFIED

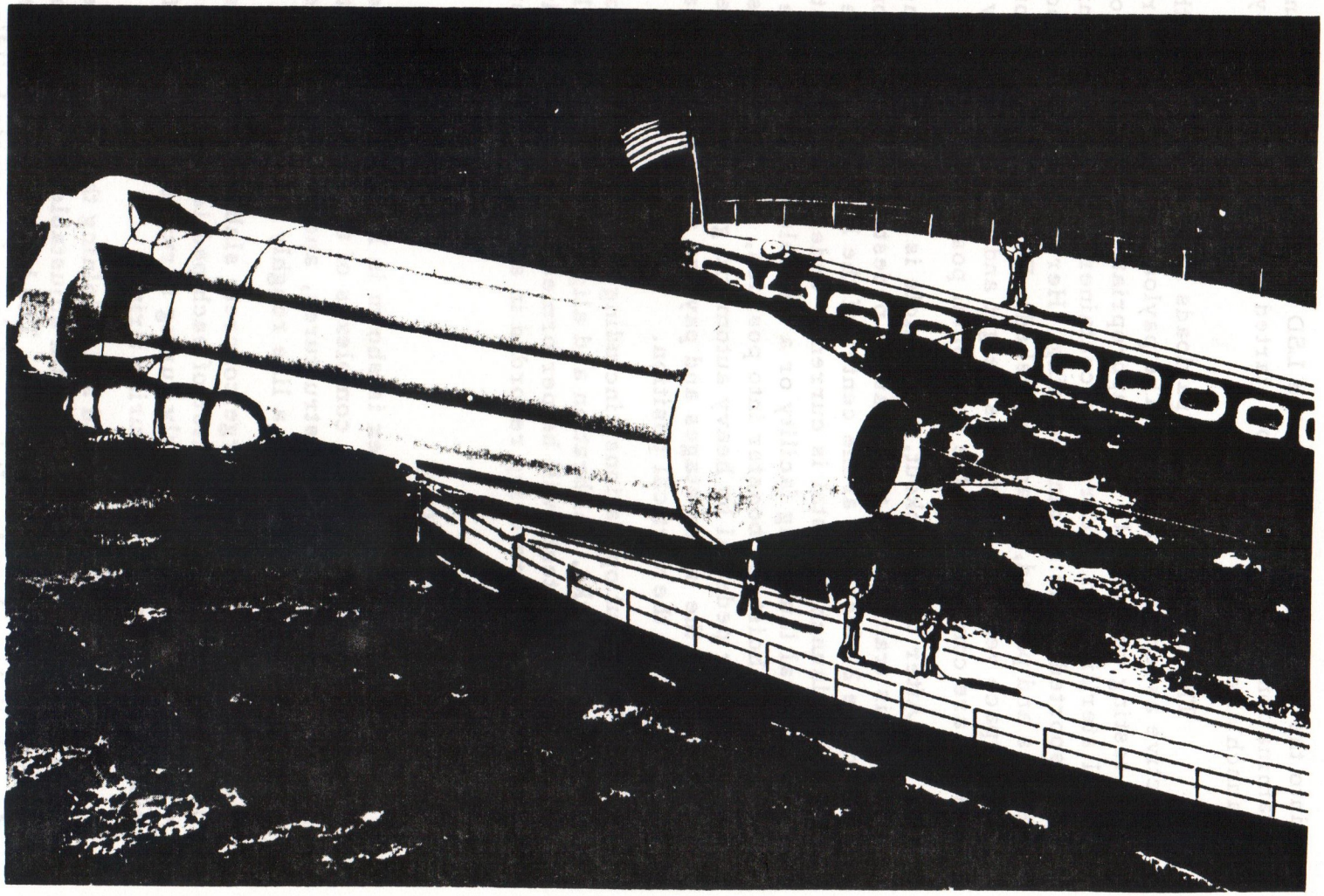

Fig. II-68. SATURN Booster Floatation into Well of LSD

UNCLASSIFIED CONFIDENTIAL SECRET

into the LSD. After loading the LSD will be pumped dry and the decontamination procedures can be started during the return voyage to the launch site dock.

The upper stages and payloads are checked out in their respective assembly buildings. The payload building incorporates facilities for testing components under appropriate environmental conditions, and final sterilization of cargo and containers. The vehicle units are then transported to the staging building. Here mating of the booster, upper stages and payload, is accomplished. Functional checks of the assembled space vehicle, as well as weight and center of gravity determinations, are completed in the horizontal position.

After this checkout, the vehicle is disassembled and the booster section is transferred to the launch pedestal. This is a concrete structure 27 feet high at the center of the launch pad. The first such SATURN launch pedestal is currently under construction at AFMTC. The vertical launching facility or a suitable movable crane is moved forward to hoist the booster into position, the later being secured to the launcher pedestal by heavy automatic grab hooks. After erection of the booster, the upper stages and payload are hoisted and assembled to the vehicle in the vertical position.

Checkout operations, including functional checks, overall tests, pre-launch checks, calibration and alignment, simulated flight tests and flight safety tests will be performed after assembly, during which procedures data are being recorded in a reinforced concrete blockhouse 2700 feet away.

## D. LAUNCH FACILITIES

A typical launch complex is shown in Fig. II-69. The equatorial site consists of four launch complexes of this type for a total of eight launch pads, eight vertical structures, and four blockhouses. The eight launch pads are arranged in a line roughly north to south.

The launch pads are large concrete slabs which are spaced some 3155 feet apart. At the center of each pad is the launch pedestal which will hold the missile securely during servicing and will deflect the rocket exhaust gases as required during firing.

Mounted on the launch pad and adjoining the launch pedestal is the umbilical tower, a steel mast with adjustable arms for connections to the vehicle stages before launch. The blockhouse is located 2700 feet from both launch pads. It is a reinforced concrete building in which the launch countdown is conducted. The blockhouse is connected to the

## EQUATORIAL LAUNCH COMPLEX #4
(TYPICAL)

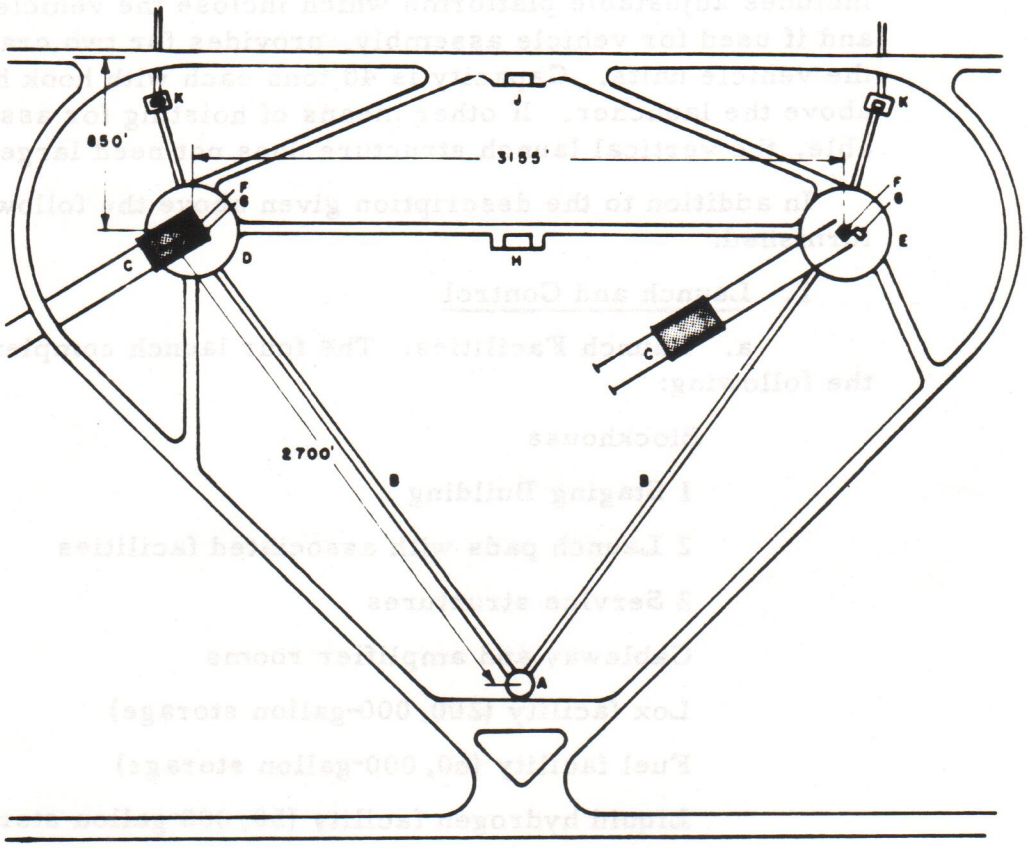


KEY

A - BLOCKHOUSE #4
B - CABLEWAYS
C - SERVICE STRUCTURES
D - LAUNCH PAD #7
E - LAUNCH PAD #8
F - LAUNCH PEDESTALS
G - UMBILICAL TOWERS
H - LOX INSTALLATION
J - FUEL INSTALLATION
K - SKIMMING BASINS

NOTE
DISTANCE TO ADJOINING COMPLEX IS 6310'

Fig II -

Fig. II-69. Equatorial Launch Complex

launcher and umbilical mast through cableways providing electrical, pneumatic, hydraulic, and communications services.

The propellant storage and transfer facilities are located between the pad as indicated in Fig. II-69.

The vertical launch structure, rolling on rails, is thought of as being a structural steel checkout facility serving each launch pad. Its structure includes adjustable platforms which inclose the vehicle during checkout, and if used for vehicle assembly, provides for two cranes for hoisting the vehicle units. Capacity is 40 tons each with hook heights of 245 feet above the launcher. If other means of hoisting for assembly are available, the vertical launch structure does not need large cranes.

In addition to the description given above the following details are furnished.

1. Launch and Control

a. Launch Facilities: The four launch complexes each include the following:

Blockhouse

1 Staging Building

2 Launch pads with associated facilities

2 Service structures

Cableway and amplifier rooms

Lox facility (200, 000-gallon storage)

Fuel facility (60, 000-gallon storage)

Liquid hydrogen facility (50, 000-gallon storage)

High pressure gas facility

Roads and utilities within the complex

b. Control Facilities: Instrumentation sites and a control and operations building of approximately 75, 000 square feet in area will be provided.

2. Technical Operations

Assembly and Checkout Buildings: A total of 200, 000 square feet will be required including eight units as follows: 75 feet x 250 feet assembly and checkout area, 35 feet clear height with 60 ton bridge crane; 25 feet x 250 feet area for shops, laboratories, storage and office. Entire area designed to maintain 40% RH at 80°F.

Payload Checkout Buildings: A total of 100,000 square feet will be required including four units as follows: 100 feet x 250 feet area with 35 feet clear height and 40 ton crane. Checkout and assembly requirements include facilities for decontamination and sterilization. Design is for 40% RH at 80°F in primary areas.

Vehicle Storage: A total of 260,000 square feet will be required including 26 units 40 feet x 250 feet. No crane required if vehicle stored on transporters.

Payload Storage: The total area requirements anticipated at this time are 23,000 square feet.

Technical Shops and Test Facility: The 50,000 square feet area includes 36,000 square feet shop area with 60 ton bridge crane, 9,000 square feet tool and storage area. On-site maintenance and repairs of pads and towers is assumed. This facility includes six to eight vacuum test chamber and mechanical equipment area.

Medical Laboratories and Holding Facility: Facilities totaling approximately 30,000 square feet will be provided in connection with the hospital to meet for research and laboratory needs. In addition, a holding facility will be provided adjacent to the hospital for isolation and control of "in-transit" personnel. The holding facility will provide secluded living quarters, dining, and recreation facilities for 30 persons. A high altitude environment area will be included in this facility.

3. Service and Logistical Facilities

Roads: Approximately seven miles of heavy duty roadway, 28 feet in width will be provided between the cargo pier, the vehicle assembly, and storage area, and the launch complexes. This roadway and the approximately 220,000 square yards of apron areas adjacent to the various buildings will be designed for the 100 ton load of the vehicle transporter. In addition, approximately 58 miles of primary and secondary roads will be required exclusive of streets in the built-up housing and community areas.

Sewage Treatment Plant: Primary treatment is considered adequate for a site such as Christmas Island. Plant capacity of 1.2 million gallons per day will be required.

Waste Incinerator: An estimated 50,000 pounds of waste per day will require an 8000 pounds per hour plant capacity.

Water Supply: A source of 2.0 million gallons per day will be developed from streams, wells and/or from fresh water lagoons as applicable. Facilities provided will include treatment plant and pumping

stations, approximately 1,000,000 gallons elevated storage and two 12,000 gpm pumping stations with reservoir for fire and flushing requirements in the launch area.

Electric Power: The estimated requirement for the site is 56,000 KW. A stream plant with four 20,000 KW units, (one standby), together with a primary distribution system totaling approximately 35 miles is required.

Bulk Fuel Storage: Total bulk storage capacity of 8,000,000 gallons will be provided based on the following requirements:

Power - 1,500,000 gallons per month

Technical - 1,500,000 gallons per month

Jet Fuel and AVGS - 1,000,000 gallons per month

Gasoline and misc - 500,000 gallons per month

Hydrogen-Oxygen: Since there will be requirements for considerable quantities of liquid oxygen and liquid hydrogen at the equatorial launch site, facilities will be provided for their generation. These facilities will have the capability of generating and of pumping from the plant to launch complex storage facilities.

Port Facilities: Estimated requirements for handling the necessary incoming supplies and equipment, and booster recovery operations include the following:

Channel, 200 feet wide, 35 feet deep, 11 miles in length

Dry Cargo Pier, 90 feet x 500 feet with two 100 ton cranes

POL Wharf 40 feet x 300 feet, and pumping station

LSD Berthing Facilities

Small boat docks

Transit warehouse, port administration and cafeteria facilities

Site Work and Miscellaneous Utility Items: This item includes site work such as clearing, grading, etc., construction of streets, curbs, walks, lighting, secondary electrical distribution, sewage collection, storm drainage, fencing and bulk fuel distribution to the launch areas.

Service Facilities: This includes general administration and headquarters building, fire station, security facilities, general warehousing, maintenance shops, bakeries, laundry, dry cleaning plant,

ice plant, refrigerated warehouse and meat cutting mechanical and electrical repair shop, salvage and surplus property facilities, signal office and shop, telephone exchange, communication center, radio transmitter and receiver station, photo laboratory and film library, motor repair shops, gasoline station and supporting facilities, exchange maintenance shop, exchange retail warehouse, motor pool, and transportation office.

Temporary Construction Camp: The construction camp will provide temporary accommodations for 2500 persons and will include housing, dining, administration, recreation, stores, dispensary, bakery, cold storage, general warehousing, laundry, material sheds, temporary power, etc.

Airfield Facilities: Includes 200 feet x 11,400 feet runway, four helicopter pads, hardstands, taxiways, lighting, navigational aids, compass swing base, hangars, fire and rescue station, operations building and control tower, passenger and freight terminal building, parts storage and flammable storage.

4. Housing and Community Facilities

The facilities considered in this paragraph, as well as the service and certain logistical facilities discussed elsewhere, were based on a total installation population of 10,000 including 4600 dependents.

Housing: Includes 2000 family units, 3500 bachelor type quarters, and 100 spaces for transit personnel.

Medical: Facilities include a 100-bed hospital on a 200-bed chassis and a 14-chair Dental Clinic.

Community Facilities: Includes department store, cafeteria, gasoline service station, bowling alleys, bank, grocery store, chapels with religious education facilities, craft shops, entertainment work shops, gymnasium, library, club facilities, swimming pools, bath houses, post office, theater, dependent schools, and miscellaneous outdoor recreation facilities.

Support for Bachelor Quarters: Includes dining, supply, administration and motor park facilities, stores, and gymnasium.

## E. POSSIBLE EQUATORIAL LAUNCH SITES

Of all potential equatorial launch sites only those listed below sufficiently satisfied the general selection criteria to warrant discussion. For the general location of sites, see Fig. II-70.




Fig. II-70. World Wide Site Choices for an Equatorial Launch Facility

1. Somalia (0° latitude)

Located on the east coast of Africa, Somalia is now administered under Italian - United Nations trusteeship, but will become independent in 1960. Approximately one hundred square miles, south of the navigable Guiba River, appears suitable for a launch site. This area is on level terrain, with limited rainfall. The Guiba River, however, would provide adequate water. Azimuth and range here is good for equatorial firings but only fair for polar firings as there would be danger of booster fallout on inhabited areas. The remote location relative to the United States would be a major disadvantage. Because of the logistic problem no further consideration is given to this location.

2. Manus Island (South 2° latitude)

Manus Island, which lies 200 miles to the north of New Guinea, is under the administration of Australia under the trusteeship system established by the Charter of the United Nations. The island is 50 miles long and 20 miles across, hilly throughout except the eastern end which is relatively level and swampy. The highest elevations range from 1500 to 3000 feet in the central region. The island appears suitable for both equatorial and polar missions, but there would be danger of booster fallout over inhabited islands. Manus Island would support a large population but here again the distance from the United States and the problem of logistics support seems to eliminate this location from further consideration in this report.

3. Christmas Island (See Fig. II-71)

The center of this Pacific coral atoll is approximately 1°59' north latitude and 157°30' west longitude. It is approximately 160 square miles in area, of which about 100 square miles are usable. Average elevation is approximately 10 feet above sea level with a few sand hills 20-40 feet high. It is administered by the British as a part of the Gilbert and Ellice Islands Colony; however, the United States also claims sovereignty. The chief use of the island in the past has been for coconut plantations. There are about 60 permanent inhabitants of the island and, at present, there exists a British headquarters for nuclear tests. The British have maintained a radio station (now includes daily weather service) on the island since 1937.

Transportation distances by water: From New York City - 7300 miles. From Los Angeles - 2900 miles.

Climatological and Meteorological Conditions: Temperature - Minimum 74°; Maximum 91°. Rainfall - Average annual: 22 inches. Has varied from 10 to 300 inches. Relative Humidity - normal. Air

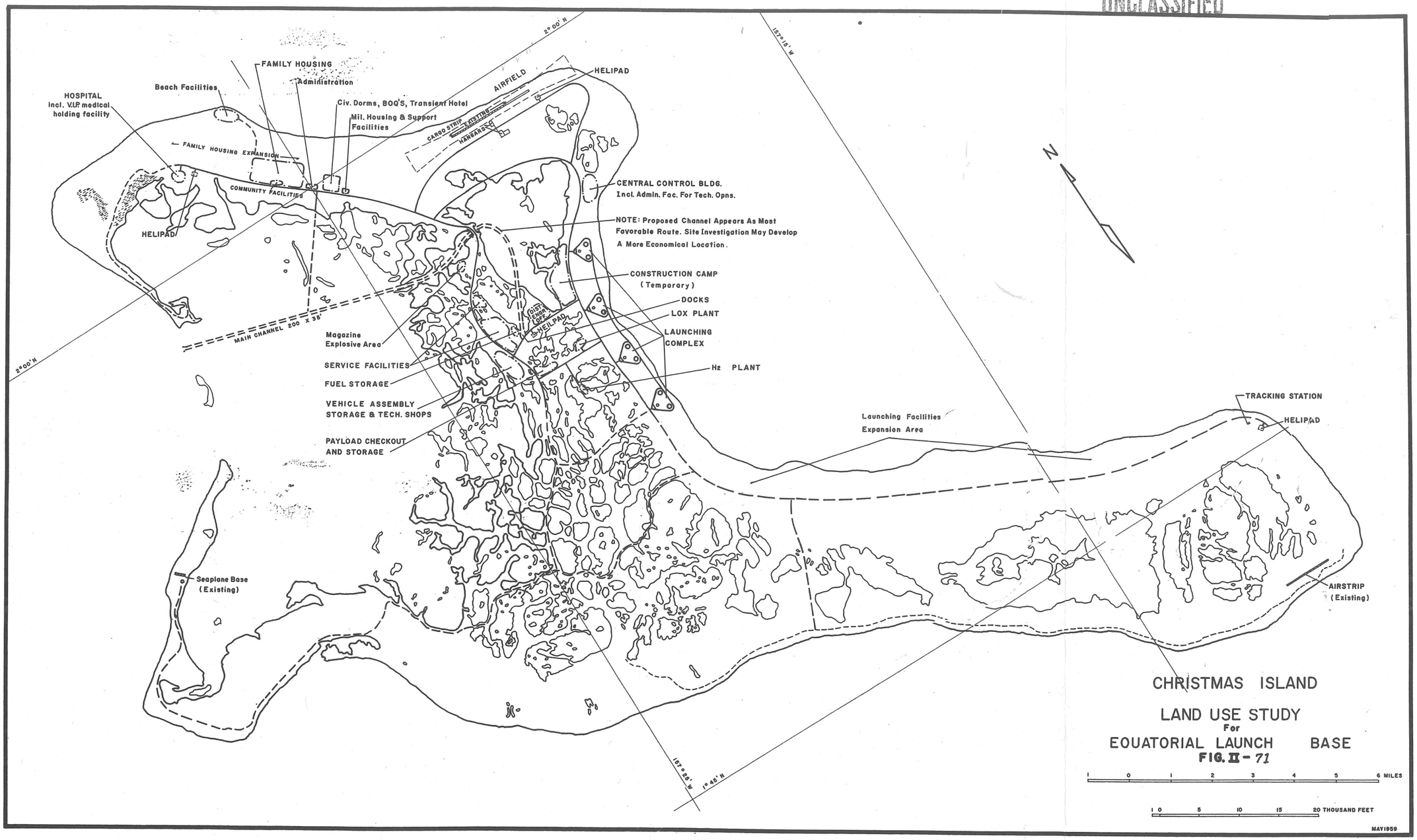


Fig. II-71. Christmas Island

movement - prevailing winds from east and southeast with northeast in March and May. No hurricanes or severe storm. Health conditions - near ideal living conditions; free from malaria.

Soil and Foundation Conditions: At a comparatively shallow depth, a fairly hard stratum of sandstone occurs, still in formative stage. Two test pits indicated:

Test 1

Top 8 inches - sandy loam

Next 12 inches - 80 percent coral, 20 percent sand

Next 20 inches - 10 percent coral, 90 percent sand

Test 2

Top 12 inches - 80 percent sandy loam, 20 percent coral

Next 12 inches - 90 percent coral, 10 percent white sand

Regional Factors: Nearest city for logistic support and for normal "social outlets" is Honolulu, Hawaii (1950 population 497,000), 1160 miles away.

Labor - No source of local labor.

Construction materials - Except for sand and possibly coral aggregate, all material must be shipped in.

Food supplies - All food must be shipped in.

Water supply - It is believed that an adequate quantity of water can be collected just above the sandstone stratum and from the fresh water lagoons.

Power and fuel - Power must be generated locally from imported fuel.

Transportation - Dock Facilities. London Harbor, a protected natural harbor on the west side of the island has landing facilities, quays, and several piers. Main harbor entrance has a depth varying from 12 to 18 feet (mean tide range about two feet). Anchorage facilities exist for several coasters in the open roadstead off the lagoon in depths of approximately 100 feet. Four mooring buoys (one telephone-equipped) in the roadstead are believed to be used by large vessels. Landing facilities consist of over 1000 feet of wharfage; berthing length 330 feet, five piers, wharf derrick, and industrial tracks on two wharves. Channel dredging would be required for a distance of about 10 to 12 miles to the dock site.

Airfield Facilities: Two existing all-weather runways, one 6890 feet long, the other 5050 feet long, both 200 feet wide of two-inch asphalt on hard-packed coral, would require lengthening and strengthening to be adequate for proposed operational use. Support facilities of all categories would have to be added.

4. Brazil (Ref. Fig. II-72)

A site in the State of Maranhao, Brazil was selected after studying map and air-photo information of the entire Brazilian coast between 2° north and 2° south latitude, (a straight line distance along the coast of about 680 miles). Much of this coastal area is swampland heavily clothed with mangrove and comprises a succession of points or promontories separated by bays or estuaries three to ten miles wide as they meet the Atlantic. Along the shore east of the Amazon mouth, swampland for eight to ten miles south of the Atlantic is interlaced with sizeable streams, 20 to 60 feet wide, 1000 feet to 3000 feet apart. No habitation or farm clearings appear in this area.

Good high ground exists west of the North Channel of the Amazon north of the town of Macapa in the State of Ampa. But from this site polar launchings would be over land for a distance of 200 miles. Launchings to the east would be over two large islands (Janaucu, Caviana), known to have small fishing villages, so that control of these delta islands would probably be necessary.

Good high ground occurs at the east end of the shore line investigated, near where the 2° south latitude line meets the Atlantic coast. Photographs show some steep bluffs (height indeterminable) rising from the shore, rather than all swamp. Along the shore line between 2° 3' and 1° 40' south latitude launchings would be entirely over water to the north and to the east. Access to water would be from 5 to 15 miles long depending on detailed selection of the operational area. This is the site described in greater detail herein.

Proposed site is from 1° 40' south latitude to 2° 5' south latitude; from 44° 30' west longitude to 44° 15' west longitude. Photographs show many small clearings (5 to 30 acres) of cultivated land. A small town exists on the shore of one estuary. Ownership is unknown, assumed private plantations. On the 2° south latitude line, an estuary (Barro do Calhau) at the mouth of a small river (R. Arapiranga) has on its north shore a small town, covering about 0.4 of a square mile variously called Cuteiro or Outeiro. The number of families (information not available) which would require resettlement elsewhere is unknown. In addition, a considerable number of houses appear next to cultivated areas five to ten miles out from Cuteiro; these would probably require replacement.

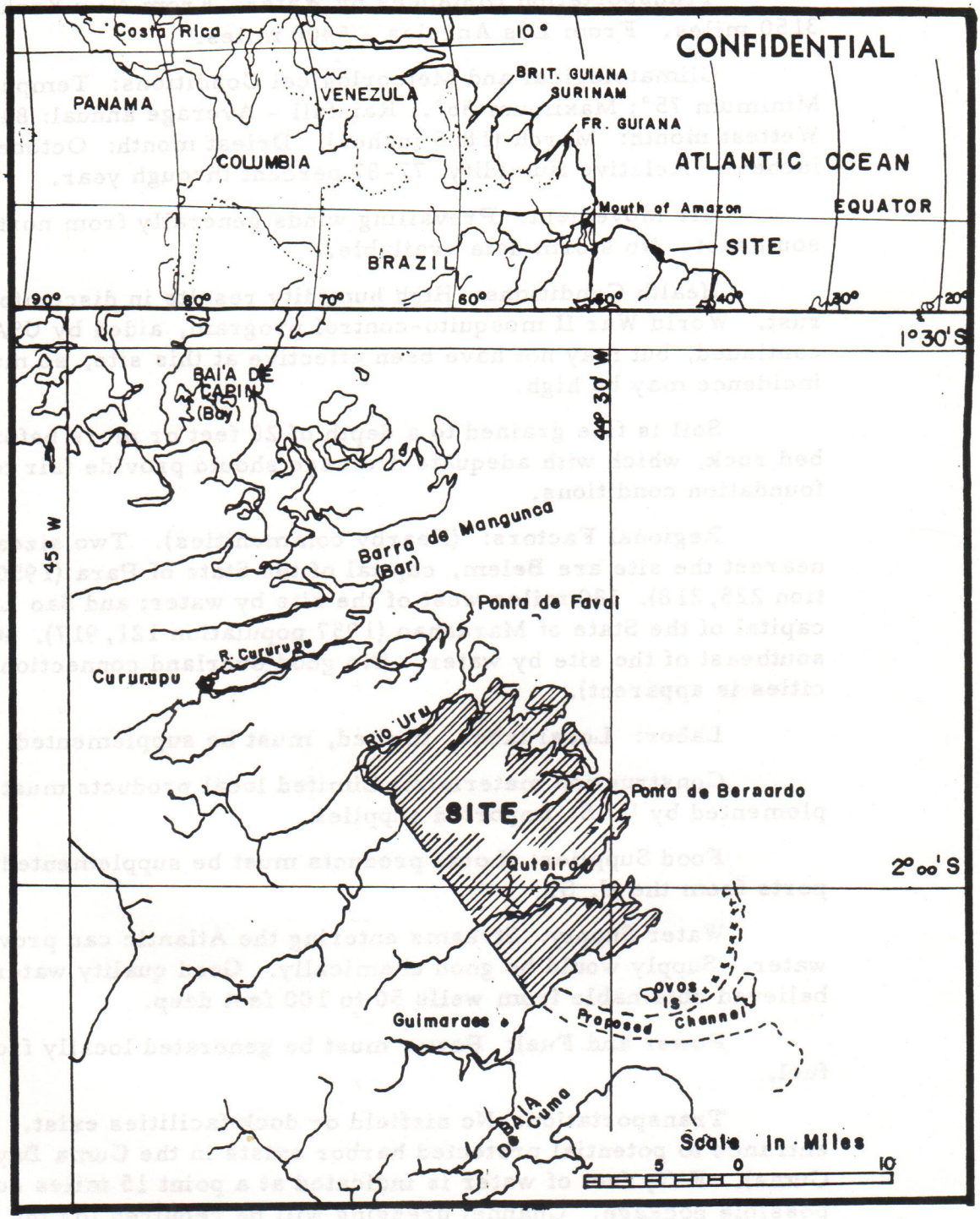


Fig. II-72. Potential Site in Brazil for Equatorial Launch Base

Transportation Distances by Water: From New York City - 3150 miles. From Los Angeles - 5400 miles.

Climatological and Meteorlogical Conditions: Temperature - Minimum 75°; Maximum 86°. Rainfall - Average annual: 84.8 inches. Wettest month: March (18.5 inches). Driest month: October (0.4 inches). Relative Humidity: 77-87 percent through year.

Air Movement: Prevailing winds generally from northeast and southeast. No storm data available.

Health Conditions: High humidity results in discomfort, mildew, rust. World War II mosquito-control program, aided by USA, is being continued, but may not have been effective at this site, so malaria incidence may be high.

Soil is fine grained to a depth of 20 feet or more before reaching bed rock, which with adequate drainage should provide fair to good foundation conditions.

Regional Factors: (Nearby communities). Two sizeable cities nearest the site are Belem, capital of the State of Para (1950 population 225,218), 380 miles west of the site by water; and Sao Luis, capital of the State of Maranhao (1957 population 121,917), 40 miles southeast of the site by water. (No good overland connection to these cities is apparent).

Labor: Local labor, limited, must be supplemented.

Construction materials: Limited local products must be supplemented by U. S. imported supplies.

Food Supplies: Local products must be supplemented by imports from the U. S.

Water Supply: Streams entering the Atlantic can provide ample water. Supply would be good chemically. Good quality water is also believed obtainable from wells 50 to 100 feet deep.

Power and Fuel: Power must be generated locally from imported fuel.

Transportation: No airfield or dock facilities exist. A natural entrance to potential protected harbor exists in the Cuma Bay (Baia de Cuma). Fifty feet of water is indicated at a point 15 miles out from possible dockage. Channel dredging will be required for the balance of the route to the dock site which is currently between 18 and 50 feet of water.

SECRET
CONFIDENTIAL
UNCLASSIFIED

## F. CHRISTMAS ISLAND VERSUS BRAZIL

### 1. Availability

Negotiations with a friendly power, assuming a priority situation, might provide right of entry for surveys within 60 days and for construction within six months. British plans for Christmas Island in connection with nuclear tests and any facilities planned in connection with the Pacific Ocean missile firing ranges are not known, but will undoubtedly affect the negotiations and perhaps the availability of this site. Except for political considerations, no problems in attainment of the Brazil site are foreseen. Relocations may delay access to some areas but with cooperation by the Brazilian Government, no serious delays are anticipated.

### 2. Construction Problems

The time required for mobilization and build-up to support the construction effort will vary depending upon the site selected. The construction program as scheduled on the accompanying chart (Fig. II-73) is contingent upon receiving authorization to proceed with planning and design by 1 July 1959, obtaining right of entry for surveys by 1 September 1959 and completion of site negotiations in time for construction operations to begin on 1 January 1960. Construction costs, facilities and schedules shown in this report for Brazil would be quite similar to those shown for Christmas Island.

If Christmas Island is selected for the location of the launch site, 15 months on the site will be the minimum required for completion of the dredging operations, erection of batching plants, and the construction of docks, port facilities, construction camp and the minimum essential roads and utilities. Except for local aggregate sources, all construction materials must be shipped in. This build-up or Phase I construction period is absolutely essential to achieving the construction capability of the magnitude required. (Construction Phases described in this section refer to Fig. II-73 and are not the overall Project HORIZON program phases). Beginning shortly after completion of Phase I, construction placement at a rate of some $7,000,000 per month will be necessary and will require a construction force ranging between 2000 and 3000 persons. The existence of an airfield and minor dock facilities at this site will be of considerable value during the initial operations. Difficult dredging and excavation conditions are anticipated. However, the site should provide good road base material and hard-standing for rapid expansion of the area of operations. Here also the pleasant climate, moderate rainfall and freedom from insect pests will be an aid to rapid construction. At this site, construction of the camp



SECRET
CONFIDENTIAL
UNCLASSIFIED

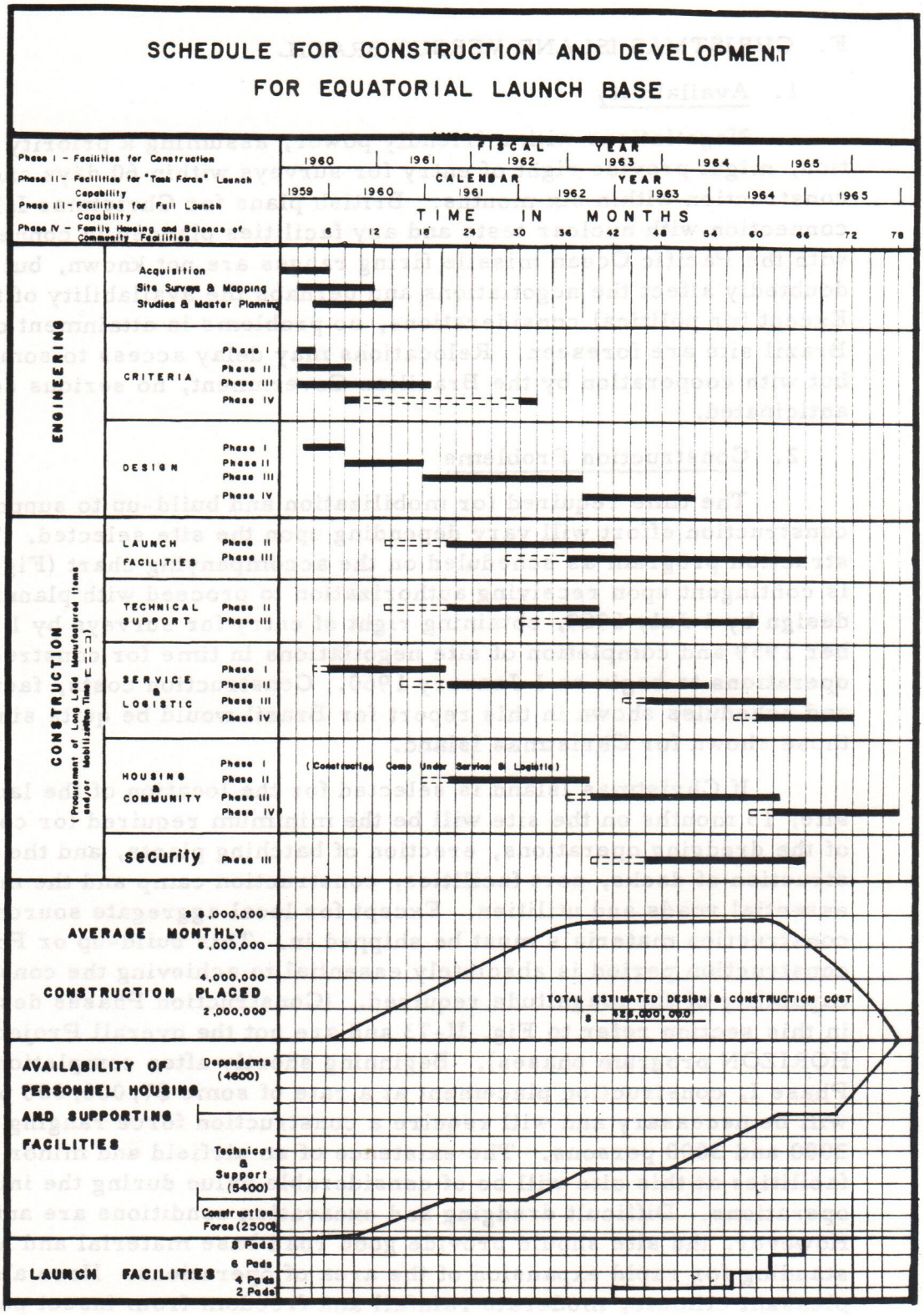


Fig. II-73. Schedule for Construction and Development for Equatorial Launch Base

CONFIDENTIAL
SECRET
UNCLASSIFIED

and other basic supporting facilities can proceed simultaneously with construction of the permanent port facilities, using the existing harbor and wharfing.

In the event the Brazil site is chosen, it is estimated that an additional six months construction time will be required through the Phase II period, which provides for task launch capability. The construction problems initially are greater in Brazil and there is no satisfactory access to the site by land, sea or air to support even limited operations. A beach head operation with personnel, equipment and materials landed by barge or LST will be required until temporary unloading facilities can be provided. Airfield construction will be an additional early priority item to support both construction operations and the initial launching operations. Relocations are expected to delay access to certain areas and may also require additional construction as well as monetary settlements. Although many small clearings are noted in aerial photographs, much of the area is dense jungle. Mapping, site surveys, and other investigations will require more time. Construction operations such as clearing, drainage, sanitation measures, and road construction will require a much greater expenditure of effort than would be required at Christmas Island. Likewise, the heavy rainfall, mud, insects, malaria and the hot, humid climate will all contribute to the generally unfavorable construction environment. Not only will a greater expenditure of effort be required to place the same amount of work, but site and climatological conditions are expected to present more difficult design problems in certain instances, with a corresponding increase in design time and construction. Although all construction materials, equipment and labor will be brought in initially, the local potential for construction and logistic support will be developed as rapidly as practicable. Past experience indicates that Brazilian workers learn readily but a training program will be required to develop an efficient labor force.

3. Operational Considerations

Climatic conditions at Christmas Island will be more favorable for sustained operations. The Brazil site, however, should offer some advantages from the standpoint of tracking. Land-based tracking stations are possible downrange from the Brazil site, whereas tracking ships will be required if Christmas Island were selected.

4. Construction Costs and Schedule

Construction costs of the launching facilities and all supporting facilities shown in Chapter VIII are based on the Christmas Island site, because they could not be made available on the Brazil site at this time

UNCLASSIFIED
SECRET
CONFIDENTIAL

due to lack of information. Facilities totaling $426,000,000 for design and construction will be located generally as shown on the land use study, Fig. II-69. Maintenance and operating costs are not included.

Excluding real estate and relocation costs, which cannot be evaluated at this time, it is estimated that construction costs in Brazil will be about 10% less. This savings anticipates a reasonably good supply of labor and the increasing development of local capabilities, and would be greater except for the less favorable design and construction conditions discussed in paragraph 2 preceding.

5. Growth Potential

The Brazil site appears to have the potential for any foreseeable growth or expansion of facilities. Conditions are, likewise, favorable for a progressive increase in local capabilities for construction and logistic support. As previously discussed, the usable land area on Christmas Island will not exceed 100 square miles. While this area is sufficient to accomodate installations several times as extensive as planned for this program, it could not accomodate nuclear propelled (booster) vehicles, unless nearby JARVIS Island is used for this purpose.

6. Conclusions

Both Christmas Island and Brazil satisfy sufficiently the general criteria for site selection to be acceptable for an equatorial launch site. After all these criteria are considered and the comparison made, a choice as to which is the best site can be made only after some relative importance or priority scheme is set up for the various desirable characteristics. It is believed that ultimate site selection will be governed by cost and early availability.

SECRET CONFIDENTIAL UNCLASSIFIED

# (S) CHAPTER VI: PROGRAM LOGISTICS

## A. INTRODUCTION

The logistical support for Project HORIZON has been studied in overall scope as well as through detailed investigations of specific areas such as manufacturing considerations, transportation considerations, movement control, personnel, and personnel training. This chapter is devoted to the discussion of these studies.

The logistic organization required to support Project HORIZON will be large, in fact larger than any single known or proposed industrial organization. This leads immediately to the conclusion that military support will be required, such as that used in the polar expeditions. The criticality of timely delivery of equipment and supplies necessary to support this type of manned operation lends additional emphasis to the requirement for military participation. A review of military supporting capability, together with project requirements, shows quite clearly that adequate logistical support can be provided by the various services in conjunction with and as part of their normal operations. The degree of military support has not been presented, since degree of participation may be determined by non-technical desires based on the world-wide political situation. However, in addition to the previously discussed reasons for military support, in certain areas of the project, it will be more economical to utilize the existing talent, experience, and established capabilities of the military.

## B. MANUFACTURING CONSIDERATIONS

As the requirements for space programs become greater, both in vehicle size and number, production capabilities must be judiciously utilized. Recovery will play a major role in reducing the number of booster recovery, the total number of boosters needed for the 229 scheduled launchings is significantly reduced to only 73.

Since the diameter of the boosters and some of the upper stages and payloads is 256 inches, the most economical means of transporting these from the manufacturing site to the launch site is by water. Transportation of these large units by air does not appear economically feasible in this time period.



UNCLASSIFIED CONFIDENTIAL SECRET

In view of the above, it would be extremely desirable to manufacture the large-diameter items near a waterway capable of handling sea-going ships. Over half of the vehicle stages and payloads required are 256 inches in diameter and, therefore, accessibility to water transportation is of major importance in the selection of contractors for this program.

Table II-28 shows the number of vehicle stages and payloads which must be produced to support this program. These production requirements are based on the establishment of the lunar outpost and one year (1967) of operational supply. Continuation of the program beyond 1967 and any expansion of the lunar facilities or personnel strength would, of course, add additional requirements.

It has been assumed that a booster would be ready for shipment six months before the scheduled launch date for the first launch of that particular booster. Upper stages and payload containers should be ready three months before the scheduled launch date. However, the outlined production rates allow for sufficicient spares of each item to be on hand at the launch site for emergency flights and for replacement. The manned capsules are recoverable; therefore, very few are needed. The expendable upper stages and one-way cargo payloads require the largest production rates. A total of 614 various vehicle stages and 206 payloads are needed. Peak production rates for this program would occur during the last half of 1965 and slowly decline until the outpost is completely established.

In reviewing the present and projected national manufacturing capabilities, it is believed that the requirements of this program can be handled easily. Because of the low production rates and small total number of some of the components required, advantage can be taken of the smaller manufacturing facilities which exist today. Only the items with large total numbers and high production rates would require the large facilities of our present missile producers. The utilization of the capabilities of small manufacturers would eliminate the need for large new facilities.

Most of the vehicle stage and payload container assembly will be accomplished at the manufacturer's plant. To maintain maximum flexibility with respect to emergency flight requirements, it is desirable to load the actual payload into the containers at the launch site. This allows for last minute changes in the cargo for a particular mission.

Table II-28

## VEHICLE - PAYLOAD PRODUCTION REQUIREMENTS

| VEHICLES | 1963 J A S O N D | 1964 J F M A M J J A S O N D | 1965 J F M A M J J A S O N D | 1966 J F M A M J J A S O N D | 1967 J F M A M J J A S O N D | TOTAL |
|---|---|---|---|---|---|---|
| SATURN I Boosters | | 2 3 2 3 2 3 3 | | | | 18 |
| SATURN II Boosters | | 1 1 1 1 1 1 2 2 2 | 2 2 2 2 2 2 2 2 2 2 2 2 | 2 2 2 2 2 2 2 2 2 1 | | 55 |
| SATURN I-2nd Stages | | 2 3 3 3 3 4 4 4 4 | 4 3 3 3 3 3 3 3 3 3 3 3 | 2 | | 69 |
| SATURN I-3rd Stages | | 2 3 3 3 3 4 4 4 4 | 4 3 3 3 3 3 3 3 3 3 3 3 | 2 | | 69 |
| SATURN II-2nd Stages | | 1 1 1 1 2 2 | 2 2 2 3 3 3 3 4 4 4 4 5 | 5 5 5 6 6 6 6 6 6 6 6 6 | 6 6 6 6 6 5 4 3 2 | 160 |
| SATURN II-3rd Stages | | 1 1 1 1 2 2 | 2 2 2 3 3 3 3 4 4 4 4 5 | 5 5 5 6 6 6 6 6 6 6 6 6 | 6 6 6 6 6 5 4 3 2 | 160 |
| SATURN II-4th Stages | | 1 1 1 | 2 2 2 2 2 2 3 3 3 3 3 3 | 3 3 3 3 3 3 3 3 3 3 3 3 | 3 3 3 3 2 | 83 |
| PAYLOADS | | | | | | |
| SI - Orbital Package | | 2 2 2 3 3 3 3 3 3 | 3 3 3 3 3 3 2 2 2 | | | 48 |
| SI - Manned Orb Pack | | 1 1 1 1 1 1 | | | | 6 |
| SII-Orbital Pack | | 1 | 1 1 1 1 1 1 2 2 2 | 2 2 2 2 3 3 3 3 3 3 3 3 | 3 3 3 2 | 57 |
| SII-Manned Orb Pack | | | | 1 1 1 1 | | 4 |
| SII-Direct Cargo | | 1 1 1 | 1 2 2 2 2 2 3 3 3 3 3 3 | 3 3 3 3 3 3 3 3 3 3 3 3 | 3 3 3 2 2 2 | 83 |
| Orbit-Lunar Package | | 1 1 1 1 | 1 1 1 1 | | | 8 |
| TOTAL ITEMS | | 3 10 13 17 19 21<br>3 12 15 14 20 | 20 22 23 26 24 26<br>21 20 22 23 25 24 | 20 22 23 24 23 22<br>24 20 23 23 23 21 | 22 19 12 6<br>21 21 16 8 4 | 820 |



CONFIDENTIAL UNCLASSIFIED

The recovery operation, involving all boosters and manned return vehicles from both the orbital station and the lunar surface, will require some limited fabrication, assembly and check-out facilities at the launch site. After recovery, the boosters and manned capsules must be subjected to a rejuvenation procedure which would involve cleaning, certain disassembly, inspection, repair of damage, replacement of parts, reassembly, inspection, and storage until next required. A supply of all necessary spare parts must be on hand so that the rejuvenation process can continue smoothly without delays.

No major technical problems can be envisioned from the manufacturing standpoint. It is anticipated that the magnitude of missile and space vehicle production facilities in the 1964 to 1967 time period will be such that this program can be handled readily and be well within the national capabilities.

## C. TRANSPORTATION CONSIDERATIONS

Freight transportation considerations both within the United States and from the United States to the equatorial launch site must be governed by two distinct categories of equipment and supplies. The first category will be limited to space vehicles, vehicle parts, ground support equipment and components of the lunar payload. These items, because of cost, production limitations, specialized use, and rigid launching schedules must move via controlled and expedited means of transportation. The second category will embrace all the normal administrative and logistical supplies consigned to the launch site.

### 1. Within the United States

a. Space vehicles, vehicle parts, ground support equipment and components of the lunar payload.

Space vehicle: The size of the components which range from 43 feet long x 10 feet diameter to 111 feet long x 21 feet 4 inches in diameter preclude the use of existing rail, highway and air transportation media on a recurring basis. Since water transportation is the most suitable mode it would be highly desirable to have the manufacturers' plants situated so as to grant ready access to water facilities. The weight of the missile sections, 3,000 to 75,000 pounds, is within existing lifting capacities of stateside port or equipment that can be obtained readily.

SECRET
CONFIDENTIAL
UNCLASSIFIED

Vehicle parts, ground support equipment and components of the lunar payload: These items can be transported via all existing modes. However, it is felt that because of production limitations and the time consuming testing period, premium transportation will be utilized for other than the initial surface movement of ground support equipment, and spare parts. It will be necessary for components of the lunar payload to move via premium transportation.

b. Administrative and normal logistical support tonnage can be transported via all modes. Due to the long lead time for fulfilling requirements, surface transportation will be adequate.

c. Personnel: Air transportation is envisioned for scientific, professional, administrative, and logistical support personnel to provide all possible productive time both in the United States and on site. Unskilled and semi-skilled type labor personnel may be transported by surface means.

2. United States to Launch Site

a. Surface Transportation

The initial portion of the launch site buildup phase must be supported by an over-the-beach operation. Water terminal facilities are scheduled to be available in April 1961. At this time, a pier operation can commence and the over-the-beach operation can be phased out. Construction tonnage will consist of a buildup from 5,000 short tons monthly in January 1962, continuing until June 1964 then phasing out.

Space vehicle sections will be fixed to their own wheeled transporters. Special handling devices, equipment and techniques will be required to load and unload. Sections must be transported on vessels modified or constructed specifically to handle them. The vessel should be capable of speeds of approximately 30 knots to reduce the number of vessels required. Present production schedules provide six months lead time for the booster section in advance of the launching date. Assembly, processing, and check-out time required on the site is one and one-half months prior to the launching date, thereby allowing transportation time to consolidate loads and reach destination. Production schedules for the other stages of the vehicle provide three months lead time with on-site required date one and one-half months prior to launching. Again, this presents the opportunity for consolidation, with



SECRET
CONFIDENTIAL
UNCLASSIFIED

one and one-half months transit time available. Following are the approximate structure weights and dimensions of the space vehicle sections involved.

SATURN I

| | Length | Diameter | Structure Weight | Length | Diameter | Structure Weight |
|---|---|---|---|---|---|---|
| Booster | 84' | 21'4" | 73,400 | 90' | 21'4" | 73,300 |
| 2nd Stage | 73' | 10' | 11,400 | 107' | 21'4" | 39,000 |
| 3rd Stage | 43' | 10' | 3,800 | 56' | 21'4" | 11,500 |
| 4th Stage | | | | 51' | 21'4" | 5,600 |
| Cargo Package | 30' | 10' | 3,000 | 25' | 21'4" | 7,000 |
| Manned Orbit Package | 45' | 10' | 6,000 | 45' | 21'4" | 12,000 |
| Direct Flight | | | | 36' | 10' | 12,000 |
| Orbit-Lunar Manned Package | | | | 104' | 21'4" | 60,000 |

The first SATURN I booster will be available for shipment in February 1964 along with a SATURN I orbital capsule. Production rates increase during 1964 and the early part of 1965, with a maximum production of 26 units (stages or payloads) per month in August 1965 and a gradual decrease in production through 1966 and the first half of 1967. During the entire program until December 1967 there will be a total of 820 units shipped from the United States.

Ground support equipment and vehicle spare parts can be transported initially (one time lift) on a general cargo ship. Resupply, comprising low weight and volume components, will, in all probability, be on an emergency basis. Air transportation will be necessary.

Programmed vessel sailings will support the estimated monthly administrative tonnage requirements of 25,000 short tons general cargo and 5,500,000 gallons of miscellaneous petroleum products. This general cargo will be required on site beginning April 1964.

Movement of personnel by water is contemplated only for unskilled and semi-skilled type personnel. Dependents could be scheduled with these movements.

b. Air Transportation

Scheduled and special mission airlift will be utilized for priority movements of cargo and personnel. Cargo will include emergency resupply of parts for the space vehicles and ground support equipment. In addition, all components of the lunar payload will be programmed for air movement.

c. Facility and Equipment Requirements

United States facilities will not be discussed since existing surface and aerial ports of embarkation are capable of handling the personnel and tonnage requirements.

Existing surface carriers such as LSD's or escort aircraft carriers are capable, with modifications, of transporting the space vehicle sections. However, it is felt that vessels capable of speed of approximately 30 knots, will be desirable since all other space programs in the normal course of progress will require vehicles of comparable size.

The water terminal on site will be capable of discharging two ocean going vessels simultaneously at a pier 90 feet wide and 500 feet wide and 500 feet long. The pier will serve a dual purpose, i.e., handling freight and passengers. A petroleum products wharf 40 feet wide, and 300 feet long will accommodate ocean going tankers. Wharfs will be available to handle peak period tonnages and double as normal explosive unloading points. The channel will be 35 feet deep and 200 feet wide; and a protected deep water anchorage will be provided.

A segregation and temporary storage area to handle cargo moving into and out of the port is required. The road-net connecting the terminal facilities with the launch complex will provide necessary overhead and side clearances for the vehicle sections.

Air terminal will be a modern facility capable of handling the largest existing (1964) type cargo and passenger aircraft.

Facilities and equipment for administrative motor vehicle support, receiving and shipping of freight and personal property, passenger travel and aviation support within the support complex will be provided as a normal operational function.

## D. MOVEMENT CONTROL

The present system of movement control is adequate for shippments of construction, administrative and logistical support tonnages. The need for speed and accuracy in the transportation of the space vehicles, vehicle spare parts, ground support equipment and components of the lunar payload is readily apparent considering the mission and individual item cost. A modified Transportation Integrated Processing System would fill the need for expedited and controlled movements utilizing special purpose transportation equipment to the maximum.

## E. PERSONNEL AND ADMINISTRATION

Project HORIZON presents unique requirements in matters of personnel and administration just as much as it does in the technical aspects of research, development or operations. Among them are novel skills and backgrounds, broad requirements for additional acquired qualifications or capabilities, and personnel management procedures designed to generate and implement selection procedures and maintain close control over very special personnel resources. The personnel procedures required must mesh so closely and actively with training activities that it is difficult to discuss them separately.

Examination of personnel qualification requirements, which will be discussed later, leads to recognition of requirements for early selection, continuous project association, lengthy training concurrent with R&D efforts, and rotation of personnel assignments within the activity.

As previously noted, a full range of technical staffing and support is required. However, special space-peculiar operational requirements exist and must be clearly identified and treated in future planning documents. It must be recognized that all planning factors for an operation of this magnitude and significance are not firm, particularly during the early stages of feasibility demonstration and for the operational as opposed to the purely technical.

At least in the early stages of operation of the orbital station and the lunar outpost, a different staffing pattern will prevail. Individuals must have a wide range of carefully selected skills. While this poses no insurmountable problems, it does require very careful coordination in all phases of operation from first concept approval until expansion of operations to a considerable degree at some yet undetermined date.

One of the most important non-technical qualifications is proper motivation. It is characterized by the vision to see the importance and significance of this operation, the desire to participate and to contribute and the moral courage to sustain the individual in those objectives. Closely related to the latter are the characteristics of self-confidence and confidence in the feasibility, desirability, and attainability of project objectives. All individuals must have some of the characteristics of the explorer, the adventurer, and the inventor manifested by the desire to convert the unknown to the known, to accomplish for the satisfaction of accomplishment. Conversely, there are motivation factors to be avoided. Among them are egotistic drive, thrill seeking, desire for personal publicity,and evasion of social responsibility.

Another operational requirement which also affects both personnel assignment procedures and motivation is that all personnel have a broad background of knowledge and understanding of all aspects of this nation's space efforts including development, history, objectives, problems, etc.

1. Project Management

Personnel and administrative planning for project management organization must be undertaken early in the program. Initial planning must be generated and executed in careful detail because it is critical in its effect on all other operations. It must cover the entire project-peculiar personnel and administration requirement project-wide not just within the management structure. See general discussions above and training discussions below, for implications which reach across the entire project structure.

As soon as practicable, the management structure must be activated and start to assume personnel planning responsibility on a carefully phased basis.

Personnel assigned to overall management headquarters and to any immediate subordinate United States Agency which have a major mission in planning or conducting significant parts of this operation must have a rather broad, comprehensive background in planning large operations. This experience must be associated with considerable background knowledge of all national efforts in research and development, planning, unit activation, training and deployment of missiles.

Project requirements should be governing in determination of lengths of tours of duty. There is sufficient latitude within the project to account for a reasonable amount of change of assignments, including overseas duty. For purposes of increasing individual qualifications and providing a broader base of personnel resources, personnel must be transferred between research and development and operational assignments. Some qualification requirements can be met in no other way.

The effect of project requirements will not be alone to lengthen tours of duty. It may, in fact, create requirements for many short tours of duty to permit personnel to acquire all of the basic qualifications required.

2. Terrestrial Launch Site

Personnel and administrative management requirements at the terrestrial launch site will be a major operation somewhat different in scope and nature to that found anywhere else in the project. It involves support of the R&D and operational organizations of the military services, contractors, or other departments of government, including all of the community services which fall normally in the personnel and administrative staff area of interest. Details must await more comprehensive planning.

Project-oriented personnel operating at this station will have requirements for more specialized qualifications. For example, personnel who launch operational vehicles must be highly qualified in all of the various technical skills required for missile servicing, checkout, and firing.

Personnel involved in final processing of passenger personnel for either the orbital station or the lunar outpost must have a wide range of professional medical qualifications, specifically oriented in their application to the psychological and physiological problems of pre-departure isolation/quarantine and space travel. Approximately two hundred personnel highly skilled in sub-professional, clinical, and medical technology are required in a specialized organization, Medical Lunar Staging Pavilion, to support directly the professional medical effort in maintaining complete, individual, medical monitoring of all passenger personnel.

Approximately 175 personnel involved in payload packaging and preparation must have a wide range of skills. For example, their skills

must vary from a knowledge of rocket engineering sufficient to permit an operational understanding of effect of payload on rocket dynamics to sufficient medical or public health type knowledge to understand and implement the sterilization requirements for space vehicles.

In view of the multitude of possible applications of the terrestrial launch site to space, and possibly non-space, activities only gross estimates of project-peculiar personnel requirements may be made at this time. A total of ten thousand appears to be a reasonable gross estimate of total requirements. Of this total, perhaps twenty-five hundred are expected to be uniquely qualified personnel involved in technical operations. The remainder are involved in community, administrative or logistic support or in tactical defense operations. Realistic attrition rates and replacement factors are not predictable at this time. In addition to normal attrition, factors such as operational transfers to other project-oriented assignments or to other space missions will affect strengths and requirements.

3. Orbital Station

Although the general applications of the orbital station are expected to expand with increased sophistication and technical capability to support and sustain other operations, both project-oriented and non-project oriented, discussion of personnel requirements will be restricted for the present to those which are minimum-essential project oriented. Qualitatively, the requirements are not expected to vary seriously regardless of whether the orbital station is minimum-essential or fully-operational. Quantiatively, the requirements will vary with either increased station sophistication and general applicability or increases in numbers of orbital stations.

Basic qualifications and numerical requirements for a minimum-essential orbital team are given below in Table II-29:

TABLE II-29
ORBITAL CREW
PRIMARY SKILL REQUIREMENTS

| SPECIALTY | NUMBER |
|---|---|
| 1. Vehicle Controller | 2 |
| 2. Medical Doctor | 1 |
| 3. Mechanical Engineer | 3 |
| 4. Electrical Engineer | 2 |
| 5. Communications Engineer | 1 |
| 6. Rocket Engineer | 1 |
| TOTAL | 10 |

The academic requirements for both the orbital and the lunar groups include a university degree in the specialty or primary skill involved. Several years of practical experience, at a reasonable technical level, are also required in that field. The combination of these selection criteria is expected to facilitate cross-training in related skills. Oral and/or written tests must be developed and used to verify technical qualifications and capacity to absorb satisfactorily required cross-training.

Physical selection criteria are more critical for the orbital and the lunar groups than for other elements of the project. Each selectee must be medically sound, alert and intelligent, with demonstrated physical stamina and emotional stability. No mental maladjustment or physical malformation capable of producing a functional handicap is tolerable.

Other primary selection criteria which apply to both orbital and lunar follow:

| | | |
|---|---|---|
| General | - | Trained in and amenable to group discipline |
| Marital status | - | Immaterial |
| Religious status | - | A tolerant attitude toward all beliefs |
| Sex | - | Male |
| Age | - | 21 to 45 years |
| Height | - | Not more than six feet |
| Weight | - | Not more than 185 pounds |

The duration of tour of the orbital personnel on station is estimated to be two months initially. This tour will be followed by a six-month terrestrial tour. During that time, there will be some losses in total effective crew strength due to such things as leave or medical requirements. However, the personnel will be used effectively on project-oriented duties such as active or consultant service in: equipment design or operational characteristics, personal equipment requirements, and training of new personnel. In time, their skills acquired during operations will become personnel assets in two specific ways: rotation to return tours at the orbital station or transfer to lunar outpost duties.

SECRET
CONFIDENTIAL
UNCLASSIFIED

In order to meet minimum rotation requirements, four such crews must be maintained at full strength and engaged in operations or training at all times except for absences such as normal leave. If the morale hazard of early return to orbit becomes a problem, more crews will be required to account for normal attrition or operational transfers.

4. Lunar Outpost

Common personnel qualifications which apply to both the orbital station and the lunar outpost are discussed in the foregoing under orbital station.

The lunar outpost evolves in distinct phases which directly affect personnel qualification requirements. Figure II-74 identifies the phases and their lengths. Figure II-75 identifies individual basic skill requirements consistent with Fig. II-74. Figure II-75 establishes departure dates and lengths of tours of individuals at the lunar outpost. It also establishes total time-phased personnel requirements at the lunar outpost. A narrative summary of the information on those figures follows.

The life support, exploration and site selection phase will require two men. Their missions are environmental survival, data gathering, establishment of communication to earth, exploration for confirmation of information previously gathered and permanent site selection. They must have the capability of emergency return to earth. Their primary professional qualifications should be medicine and rocket engineering.

The initial construction crew requires nine personnel during the early construction phase. They are qualified in construction, mechanical, electrical, and communications engineering and astrophysics. During this phase which will last up to 18 months, the number of personnel on site will increase to a total of 12.

An additional expansion, construction, industrialization phase is required to add more meaningful capabilities at acceptable cost. Detailed discussion of this phase is beyond the scope of this study. However, it should be noted that personnel selection and management requirements will be no less critical during this phase.

The tour of duty at the lunar outpost will vary from 3 to 12 months. This is a tentative conclusion based in part upon vehicle



UNCLASSIFIED
CONFIDENTIAL
SECRET

CONFIDENTIAL



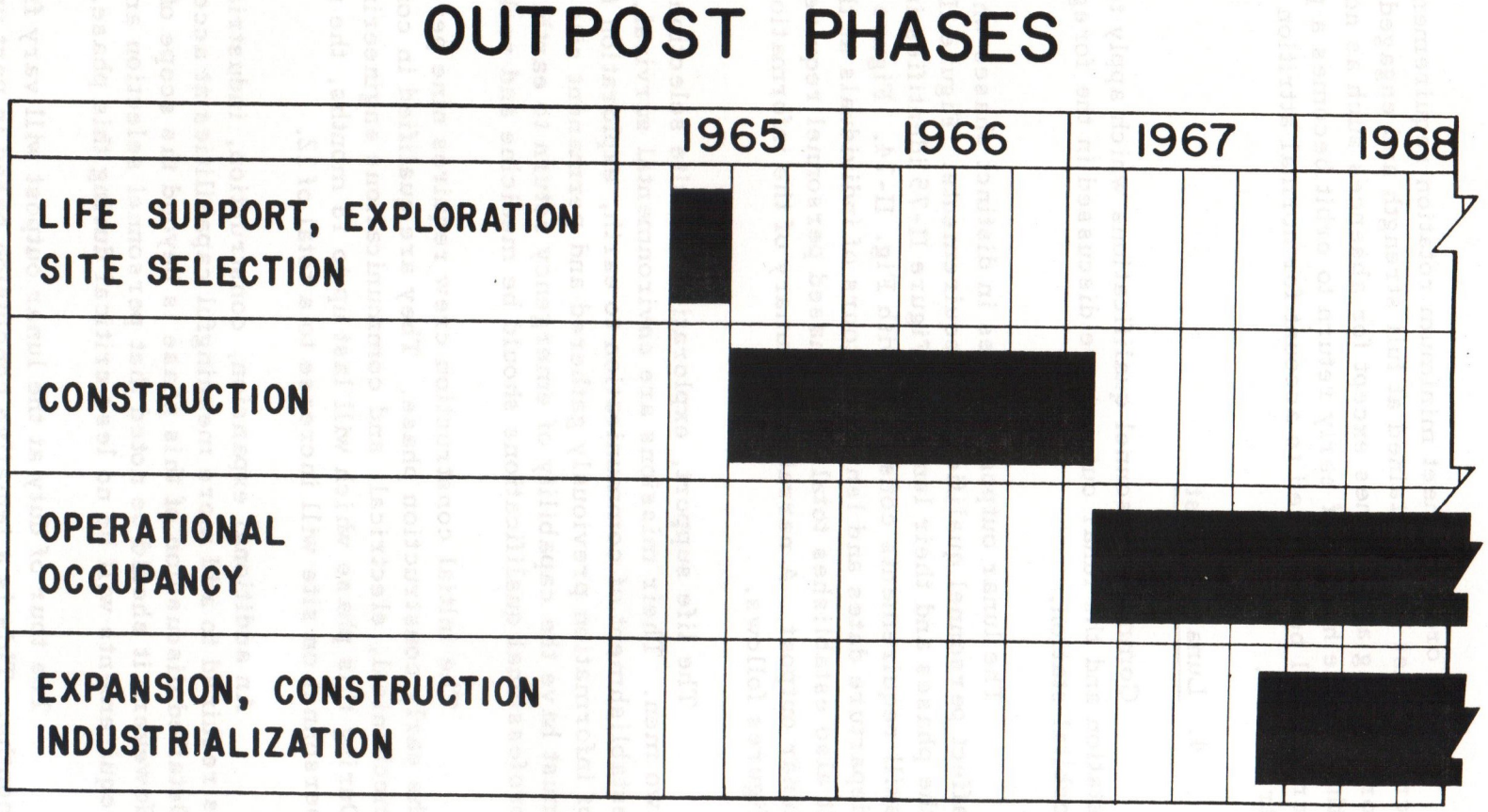


Fig. II-74 Outpost Phases

CONFIDENTIAL

SECRET CONFIDENTIAL UNCLASSIFIED

# PRELIMINARY PERSONNEL SCHEDULE

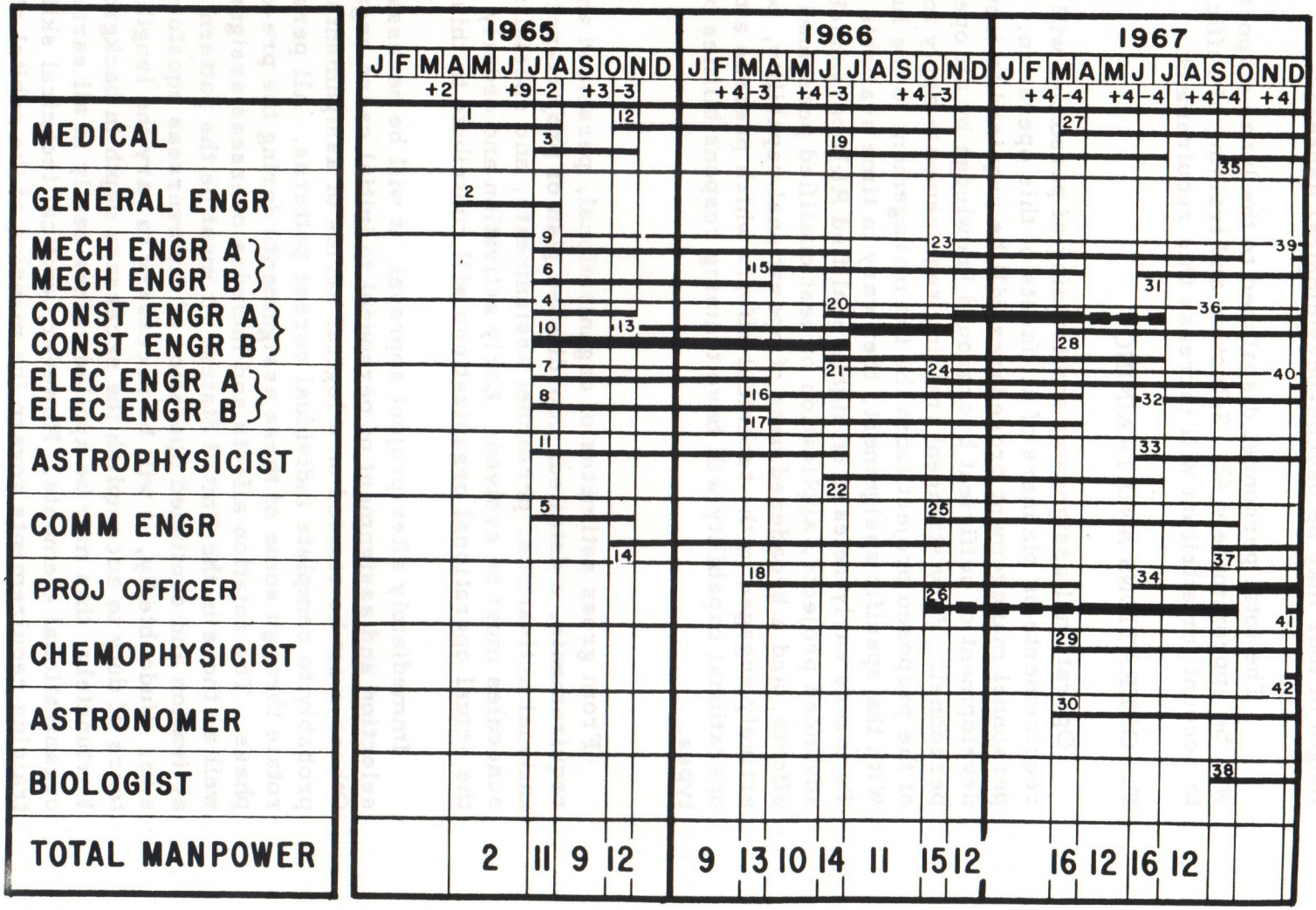


Fig. II-75 Preliminary Personnel Schedule

247
SECRET CONFIDENTIAL UNCLASSIFIED

availability data and schedules. Ultimate determination of maximum length of tour may be psycho-physiological dependent.

The total personnel dispatched to the lunar outpost through 1967 will be approximately 42. Selection and training of sufficient personnel to account for attrition will increase this requirement.

## F. OPERATIONS AND TRAINING

Operational assignment and training of personnel will pose special requirements on planners of all facets of this operation. Special personnel management procedures will be required to insure the development of sufficient background knowledge by all operational personnel. Very stringent training requirements apply to all echelons of the proposed project from the top management to the lunar outpost. With the specific assignment, they vary in time available and required. To insure early release of highly qualified R&D personnel for more advanced projects, application of best qualified personnel to training efforts, and a broadened base of operational capability, personnel actively engaged in the technical efforts which precede attainment of operational capability will have training responsibilities of various types.

From gross estimates of organizational, personnel and facility requirements, a detailed, coordinated plan of project-peculiar organizational activations, personnel assignments, and specialized training schecules must be evolved. Early activation and orderly evolution of the actual operational organizations will contribute to this end.

Immediately after project approval, it will be necessary to start selection and assignment of personnel to initial cadre organizations. Others must be started on a logical series of assignments leading probably to complete individual career patterns. All personnel will rotate through some of these assignments during the pre-operational phase. The rotation affects and includes overseas assignments as well as those in the United States. It must be the pattern for initial activation and continued operation of the overseas equatorial launch site. Undoubtedly, it will be necessary to vary the length of individual tours of duty to accomplish the necessary depth in background training. Fortunately, this may be applied rather easily in all earth-based organizational elements. However, critical technical skills and training requirements govern the manning of the orbital station and the lunar outpost.

CONFIDENTIAL
SECRET
UNCLASSIFIED

A second special requirement will be for selected training of personnel already qualified in one specialty, in one or more other specialties at univerisity or college level, or in technical or trade school work. This type training is a specific requirement for the orbital station and for the lunar outpost where maximum breadth and overlap in capabilities is required in a minimum number of personnel. This training must be project oriented and not follow set academic patterns.

A third type of training, which will supplement that discussed above, may be accomplished by using the personnel selected for the orbital station and the lunar outpost as instructor personnel for cross-training purposes in both theoretical and practical work in the latter part of the training cycle. This procedure contributes not only to training but also to development of individual teams, collective teamwork, further personnel selectivity, mutual confidence, economy, and surveillance and judgment of training progress.

A fourth type of training which requires specialized consideration for this operation is that of physical fitness. Civilian or military facilities can be used for this training.

A fifth type of training closely related to that discussed above is environmental training. This is the training which must as nearly as possible adapt the personnel selected for the orbital station and the lunar outpost to environmental conditions which they will encounter. Medical personnel will have a major role, perhaps overall responsibilty, because of the importance of both psychological and physiological concitioning and adaptation. However, an essential element of this training is involved in the man-equipment relationship. Regardless of what other environmental laboratory equipment may be developed, the personnel must train with every item of equipment that they will use during space operations. Therefore, each technical service which furnishes equipment has a part to play in the conduct of training.

A facet of environmental and equipment training which requires special mention is that of the rocket vehicles, personnel compartments, space clothing and all aspects of their operation. It must be a function of the R&D organization(s) to conduct this particular part of the training. To the personnel who actually operate in the orbital station or the lunar outpost this training contact will add to a confidence factor.



UNCLASSIFIED
SECRET
CONFIDENTIAL

When viewed jointly with the organizational and operational concepts previously expressed, it can be seen that this training requirement of considerable scope and magnitude is not necessarily chargeable to the subject operation alone. The total effect of the integrated operation is to provide a growing, retained, national asset which to a certain extent is self-amortizing.

1. Project Management

As was noted in the foregoing discussion of Personnel and Administration, above, the separation of discussions of personnel qualifications and training requirements is most difficult in unique operations. In fact, from the discussions of qualifications of personnel required to staff the project office, the inference may be drawn that to the maximum extent possible they must be selected upon the basis of experience or previously acquired formal or on-the-job training.

Screening and tentative selection of personnel for assignments to all project activities must begin immediately upon project approval. Initial assignment patterns for an indefinite period must be established immediately thereafter. Training assignments to increase background knowledge must be a part of the pattern. To a considerable extent such assignments may also serve to meet current requirements.

Specialized space training must be initiated in a manner similar to that by which the military departments accorded recognition to the requirement for guided missile instruction years ago. Thus, the pattern will be set for meeting follow-on requirements after initial selection and training of personnel. This pattern will contribute to the early attainment of the objective that project management assume full responsibility for operations and training.

2. Terrestrial Launch Site

Some of the discussions under the foregoing, apply also to the training requirement for operational launch site personnel.

Maximum use may be made of existing service schools and contractors' courses in training the personnel and units responsible for vehicle servicing, checkout, and launching. This will save time and provide previously trained school instructors or cadre personnel for operational organizations. The association will contribute to reliability

of the man-equipment team in actual operations. Those responsible for development of unique functions, facilities, equipment or procedures will be directly involved in the training of personnel in their applications.

3. Orbital Station

Training of the orbital station crew is a more complex task than that of training the terrestrial launch site personnel. This is due to the fact that in order to have all the skills required to accomplish their missions, a limited number of personnel must have extensive cross-training, both academic and practical, beyond their primary skills.

Primary skills were listed previously as personnel selection criteria. Some retraining may be required in primary skills. However, major training emphasis must be applied to cross-training and to development of collective teamwork and mutual confidence.

An indication of the extent of academic cross-training requirements is illustrated in Fig. II-76. The fact that the requirements may vary depending upon previous qualifications and the manner in which personnel are assigned to teams is recognized.

To the maximum extent practicable, the orbital station crew must undergo practical training. Except for zero-gravity training for orbital personnel and lunar equipment training for the outpost personnel much of the practical environmental training may be conducted jointly or in the same facilities. For convenience, a typical selection-to-departure training cycle for both crews will be discussed in 5 below.

4. Lunar Outpost

For the same reasons as were discussed for the orbital crew, there are requirements for extensive academic and practical cross-training of all lunar outpost personnel.

Both primary skill and cross-training requirements are shown on Fig. II-77. The early requirements shown on Fig. II-77 are similar to those shown on Fig. II-76 for the orbital personnel. The similarity supports the previously stated conclusion that it is feasible and practicable to combine certain of the training for the two crews. However, it should be noted that certain of the outpost requirements change with time to match changing operations; whereas, those of the orbital crew remain more nearly the same.

CONFIDENTIAL



# PRELIMINARY ORBITAL TNG. REQUIREMENTS

| PRIM SPECIALTY | CROSS TRAINING | | | | | | | | | | |
|---|---|---|---|---|---|---|---|---|---|---|---|
| VEHICLE A CONTROLLER B | | | | P | S | | A | | | P | |
| MEDICAL | S | P | P | | | | | | | | |
| MECH ENGR A | | | A | | | S | P | | | | P |
| MECH ENGR B | | | | | A | S | | | | | A |
| MECH ENGR C | | | P | | | S | A | | | P | |
| ELCT ENGR A | | | | | | | P | S | | | A |
| ELCT ENGR B | | | | | | | A | S | P | | |
| COMM ENGR | | | | A | A | | | P | S | | |
| ROCKET ENGR | | | A | | | A | P | | | S | |
| | MED | PSYCH | PHYSICS | ASTR | NAV | MECH ENGR | ELCT MECH ENGR | ELCT ENGR | COMM | RKTRY | GEN CONST |

IN ADDITION, ALL CREW MEMBERS WOULD RECEIVE BASIC COURSES SUCH 1. GEN MEDICINE 2. COOKING 3. MATERIALS USE 4. PERSON TO PERSON COMM SETS 5. ENVIRONMENTAL SURVIVAL 6. OTHER

S – SPECIALTY P – PRIMARY A – ADDITIONAL

Fig. II-76 Preliminary Orbital Tng. Requirements

CONFIDENTIAL

CONFIDENTIAL
UNCLASSIFIED



# PRELIMINARY OUTPOST TNG. REQUIREMENTS

| | | MEDICINE | PSYCHOLOGY | PHYSICS | CHEMISTRY | BIOLOGY | GEOLOGY | SELENOLOGY | ASTRONOMY | ASTROPHYSICS | METEOROLOGY | NAVIGATIONS | MECH ENGR | ELEC-MECH ENGR | ELEC ENGR | INSTRUMENTATION | WIRING | COMM ENGR | ROCKET ENGR | GEN CONST ENGR | ADV CONST ENGR | OPERATIONS | JURIS PRUDENCE |
|---|---|---|---|---|---|---|---|---|---|---|---|---|---|---|---|---|---|---|---|---|---|---|---|
| MEDICAL | 1 | Ⓟ | P | P | P | P | | Ⓣ | T | | | Ⓣ | | | | Ⓣ | Ⓣ | T | T | Ⓣ | | | |
| GEN ENGR | 2 | P | T | P | P | | | Ⓣ | T | T | | T | P | P | | T | T | T | Ⓟ | Ⓣ | | | T |
| MECH ENGR (A) | 3 | | T | P | P | | | | T | | | T | Ⓟ | P | P | T | T | T | Ⓟ | T | | | |
| MECH ENGR (B) | 4 | | T | P | P | | | | T | | | T | Ⓟ | P | P | T | T | T | Ⓟ | T | | | |
| CONST ENGR (A) | 5 | | T | | | | | | T | | | T | P | | | | Ⓣ | T | T | Ⓟ | Ⓟ | | |
| CONST ENGR (B) | 6 | | T | | | | | | T | | | T | P | | | | Ⓣ | T | T | Ⓟ | Ⓟ | | |
| ELEC ENGR (A) | 7 | | T | P | | | | | T | | | T | | P | Ⓟ | P | P | T | T | T | | | |
| ELEC ENGR (B) | 8 | | T | P | | | | | T | | | T | | P | Ⓟ | P | P | T | T | T | | | |
| ASTROPHYSICIST | 9 | | T | P | P | | | | P | Ⓟ | T | T | | | | | | T | T | T | | | |
| COMM ENGR | 10 | | T | P | | | | | T | | | T | | P | P | T | P | Ⓟ | T | T | | | |
| PROJ OFFICER | 11 | | Ⓣ | | | | | | T | | | T | | | | | | T | T | T | | Ⓟ | Ⓣ |
| CHEMOPHYSICIST | 12 | | T | Ⓟ | Ⓟ | | | | T | | | T | | | | | | T | T | T | | | |
| BIOLOGIST | 13 | | T | P | P | Ⓟ | | | T | | | T | | | | | | T | T | T | | | |
| ASTRONOMER | 14 | | T | P | | | P | P | Ⓟ | P | T | Ⓣ | | | | | | T | T | T | | | |

LEGEND:

Ⓟ MAIN PROF ED
P ADD PROF ED
Ⓣ MAIN TNG
T ADD TNG
(T) 1st MED ONLY

NOTE: IN ADDITION, ALL CREW MEMBERS WOULD BE TRAINED IN 1. GENERAL MEDICINE 2. SURFACE VEHICLE DRIVING 3. COOKING 4. OTHER

Fig. II-77. Preliminary Outpost Tng. Requirements

CONFIDENTIAL
UNCLASSIFIED

There is a requirement for practical training to include the erection and operation of equipment under conditions as nearly as practicable the same as those to be found on the lunar surface. Fortunately, most of those conditions except prolonged exposure to lower gravity conditions may be closely approximated. Weight of personal equipment required on the lunar surface is expected to compensate for much of that effect. More discussion on this subject may be found in the discussions of a typical orbital lunar training cycle in 5 below.

5. Typical Training Cycle - Orbital/Lunar

The training of the orbital and lunar crew will be unique in every respect. It is expected that a typical training cycle will consume approximately four years from selection to departure. As the lunar outpost becomes operational and the personnel assigned become more specialized due to the larger numbers actually located at the outpost, it is anticipated that the length of a typical training cycle will reduce. In the interim, additional personnel must be entering training every 60 to 90 days in order to maintain an available pool of crew men. Figure II-78 represents an estimate of the time requirements for the early typical training cycle. Each period of the cycle is discussed of supporting facility requirements.

Immediately after selection, personnel of the orbital and lunar crews will undergo medical preparation which may require up to 3 months. During this time they will be given very thorough physical examinations. Corrective actions such as removal of appendix, removal of tonsils, treatment or removal of hemorrhoids, hernial repair, complete dental corrections, etc. will be accomplished as required. Some time during this or later training phases, personnel of both crews must be given basic but comprehensive medical instruction which will qualify them to perform emergency first aid in space environments.

The next step in the training cycle is environmental evaluation. It is estimated to require approximately 6 weeks. The training and evaluation will be conducted in a high-altitude environment. Isolation and endurance reaction tests will be accomplished. Physical and emontional stamina will be evaluated under those conditions and final screening of personnel will occur prior to proceeding to the next step in the training cycle. Some of the medical training mentioned previously may occur during this phase. The governing factor will be facility location which is discussed later.

UNCLASSIFIED
CONFIDENTIAL

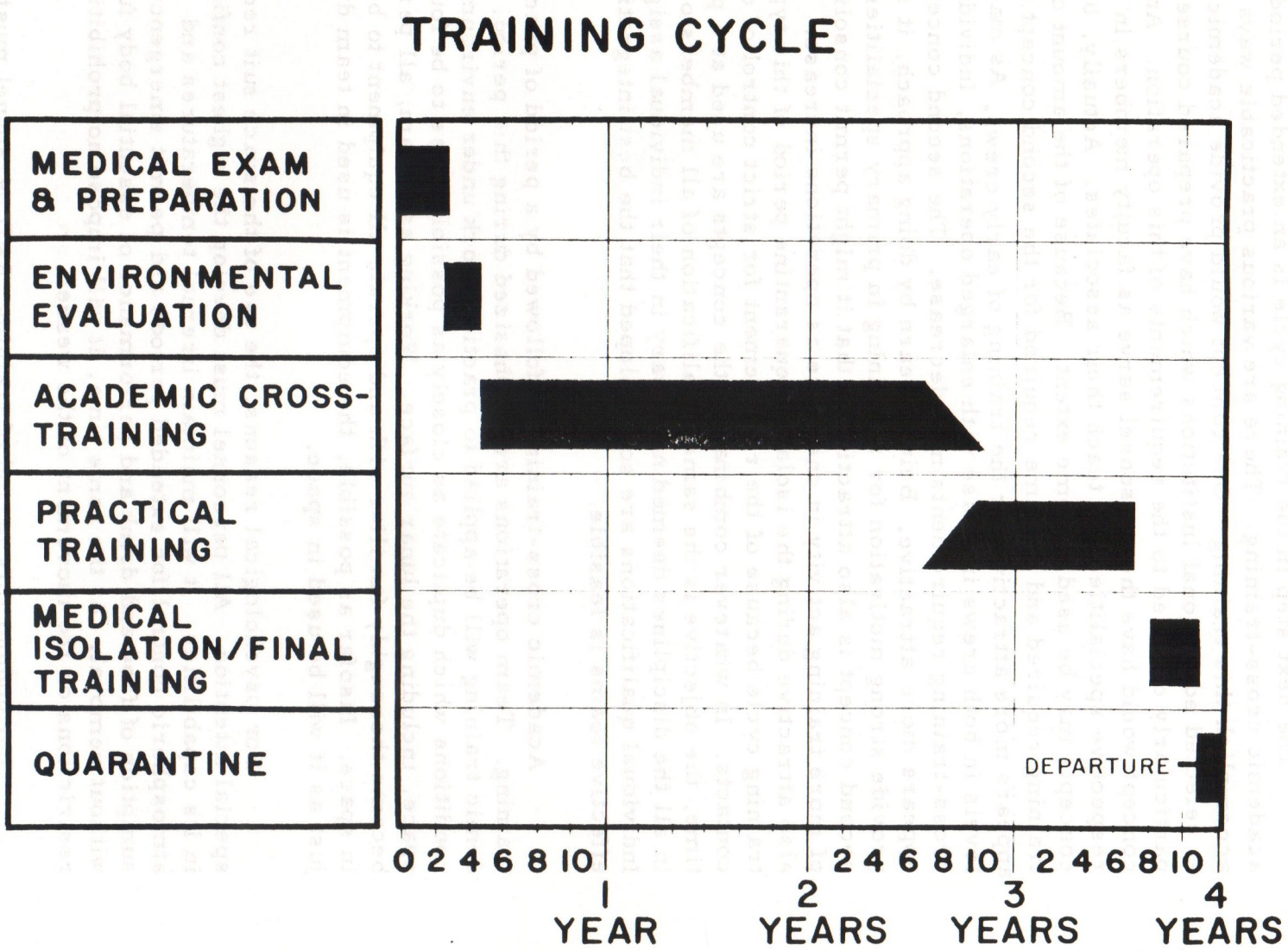


Fig. II-78. Training Cycle



UNCLASSIFIED
CONFIDENTIAL

The next step in the training cycle is an extended period of academic cross-training. There are various practicable ways to accomplish this training. One concept would provide academic training at selected educational institutions which have prepared courses particularly oriented to the requirements of this operation. Another concept would have the personnel serve as faculty members in their respective specialities and teach their associates. Actually, both concepts may be used to some extent. Because of the amount of cross-training required and the time required for the second concept the first appears more attractive for the training of early crews. As manning levels in both crews increase with enlarged operations, individual cross-training requirements may decrease. The second concept then appears more attractive. Being a learn by doing approach, it should provide strong motivation for retraining in primary specialities. The second concept is also attractive in that it might permit consolidation of more training activity in one place as operations increase. It is also attractive during the isolation/quarantine period of this typical training cycle because of the requirement for strict control of outside contacts. In whatever combination the concepts are used at a particular time, the objective is the same, qualification of all members of a crew in all the disciplines deemed necessary in their individual assignments. Individual qualifications are so developed that the best integration into effective teams is feasible.

Academic cross-training is followed by a period of practical training. Team operations are emphasized during this period. Academic training will be applied to practical work under environmental conditions which duplicate as closely as possible those to be found in space, including the lunar surface. Working as a team, all personnel become thoroughly familiar with and operate all equipment to be used in space. Insofar as possible, the equipment is used in team duties just as it will be used in space.

For psychological reasons, the use of the space suit requires special attention. All personnel must develop the highest confidence in its capabilities. It will maintain internal temperatures and atmospheric control for extended periods and permit emergency consumption of food and drink and performance of essential body functions without removal. At the same time, it will impose no prohibitive restrictions on the movement of the wearer.

Throughout this period of training, R&D personnel must contribute directly to thorough indoctrination regarding materials,

equipment, processes and procedures which they have developed. While participating in the training activity, R&D personnel must perform a final check on equipment design and functioning, and initiate action required to correct any deficiencies found.

Medical evaluation and training is also continued to include practical application under environmental conditions. The practical medical work should contribute to advancement of medical knowledge and to assurance of success of the operation from the point of view of personnel performance.

Throughout the training cycle, crew personnel will be monitored medically. They will be given periodic medical examinations to determine their physiological and psychological fitness for space duty. During the final phases of training prior to departure from earth, they will be isolated medically for a period of 120 days. The last 30 days of this period will be in complete quarantine except for contact with others in the same status. This procedure is considered to provide reasonable assurance that some personnel will not arrive at an operational space terminal to become afflicted with a communicable disease which has just completed its incubation period. During this period, personnel will remain physically active and will continue training. The faculty-student combination is particularly attractive in this situation.

6. Training Facilities

The typical training cycle just described will require a number of special training facilities. A very few facilities do exist and will fill specific needs. However, the majority of the requirements are unique and require new facilities.

Preliminary medical examinations and screening can be performed at the military hospital closest to the individual at time of selection. A special high-altitude facility is very desirable for the environmental evaluation. For convenience and economy, it should be located near an existing medical facility. The high-altitude facility permits continuous acclimatization and concurrent environmental evaluation of physical stamina and endurance. Location near an existing medical facility contributes resources required for complete medical evaluation and provides a facility for practical medical training.

In the event that the faculty-student approach to academic cross-training is applied during advanced stages of space operations, some special provisions for classrooms, laboratories, training areas, offices, and staff spaces will be required. For convenience and economy, these facilities should be located at or near environmental and/or practical training facilities. This will permit more nearly continuous acclimatization, closer integration of academic and practical training, reduction in total training time, and joint use of some facilities. It is estimated that initially the academic student load would be approximately 200. However, facility planning should provide for growth potential.

The practical training requires an environmental facility which approximates as closely as possible the environmental conditions of lunar or planetary surfaces. Equipment at this facility should include a large environmental chamber which is evacuable to very low pressures. Temperature, lighting, and thermal radiation levels must approximate very closely conditions on the lunar surface. Temperature control must extend to and include control of a layer of material similar to that expected on the lunar surface. The thickness of this layer must at least provide for sufficient depth to permit practical exercises in sub-surface construction and operations. The environmental chamber must be large enough to provide sufficient space for practical exercises involving the use of the largest foreseeable items of equipment. Substitute lighter materials may be used in construction of special training equipment to assist in the simulation of the effects of reduced gravity. This facility must permit simulation of expected conditions of darkness and isolation. This is a requirement for psychological evaluation as well as for training. Complete environmental instrumentation is required for training purposes. In addition, this facility will serve as an engineering test facility for equipment. In this role, it may require additional special instrumentation.

Practical training should also include experiencing the gravitational forces and noise levels to be expected during either launch or landing. Various noise simulators have been designed and used and are not expected to be a technical problem.

The isolation/quarantine/final training period requires a special facility which might be described as a small closed community. The most logical locale for this facility would be at the launch site. This locale precludes the development of operational problems such as quarantined transportation. Complete isolation from medical and

CONFIDENTIAL
UNCLASSIFIED

instructor personnel may not be possible. Therefore, some of those personnel may be in isolation with the orbital and/or lunar crew personnel. To preclude development of other operational problems, medical and training personnel must have all the necessary laboratory and training equipment as an integral part of this facility, separate from other similar community support facilities. The operational problem of contact with instructor personnel may be minimized by both operational and facility planning. Operationally, the previously discussed faculty-student training method is attractive. Facility planning might include such features as electronic instructor-student communication through a glass barrier which permits visual contact. The facility must provide for sports, hobbies, entertainment, and communication with the outside world.

Detailed additional study of facility requirements must be accomplished to include all of the component and supporting equipment. Supporting equipment includes but is not limited to, all of the appropriate training aids, mock-ups, and simulation devices, equipment or procedures.



CONFIDENTIAL
UNCLASSIFIED

SECRET
CONFIDENTIAL
UNCLASSIFIED

# (S) CHAPTER VII: RESEARCH AND DEVELOPMENT

## A. PROJECT PHASES

Project HORIZON has been divided into six phases which include R&D as well as operational aspects of the overall program. The schedule for each phase is illustrated on Fig. II-79 and discussed below.

Phase I - the initial feasibility study was completed on 9 June 1959 and is contained in this two-volume report.

Phase II - the detailed development and funding plan will require a more detailed study with limited experimentation. This phase will require approximately eight months to complete and will cost $5.4 million.

Phase III - the hardware development and system integration phase constitutes the majority of the development effort. In Phase III, all:

Systems (space transportation, communications, outpost, etc),

Sub-systems (space vehicles, communications, ground and relay stations, etc),

Components (rocket engines, communication transmitters and receivers, etc),

Schemes and procedures (orbital rendezvous, orbital fuel transfer, etc),

required to accomplish the project objectives will be developed.

Phase IV - the construction of the lunar outpost involves the utilization of the systems and procedures developed in Phase II and is in actuality an operational phase of the program. The completion of this phase will accomplish the initial objective of the program, - "establish a manned lunar outpost."

Phase V - the initial period of outpost operation will begin in December 1966 and will constitute the first completely operational phase of the program.

Phase VI - the expansion of initial outpost operational capabilities could begin at any time after December 1966. For the purpose of this study, it has been assumed to begin in January 1968.



UNCLASSIFIED
CONFIDENTIAL
SECRET

CONFIDENTIAL SECRET



**PROJECT HORIZON**

**RESEARCH AND DEVELOPMENT PROGRAM**

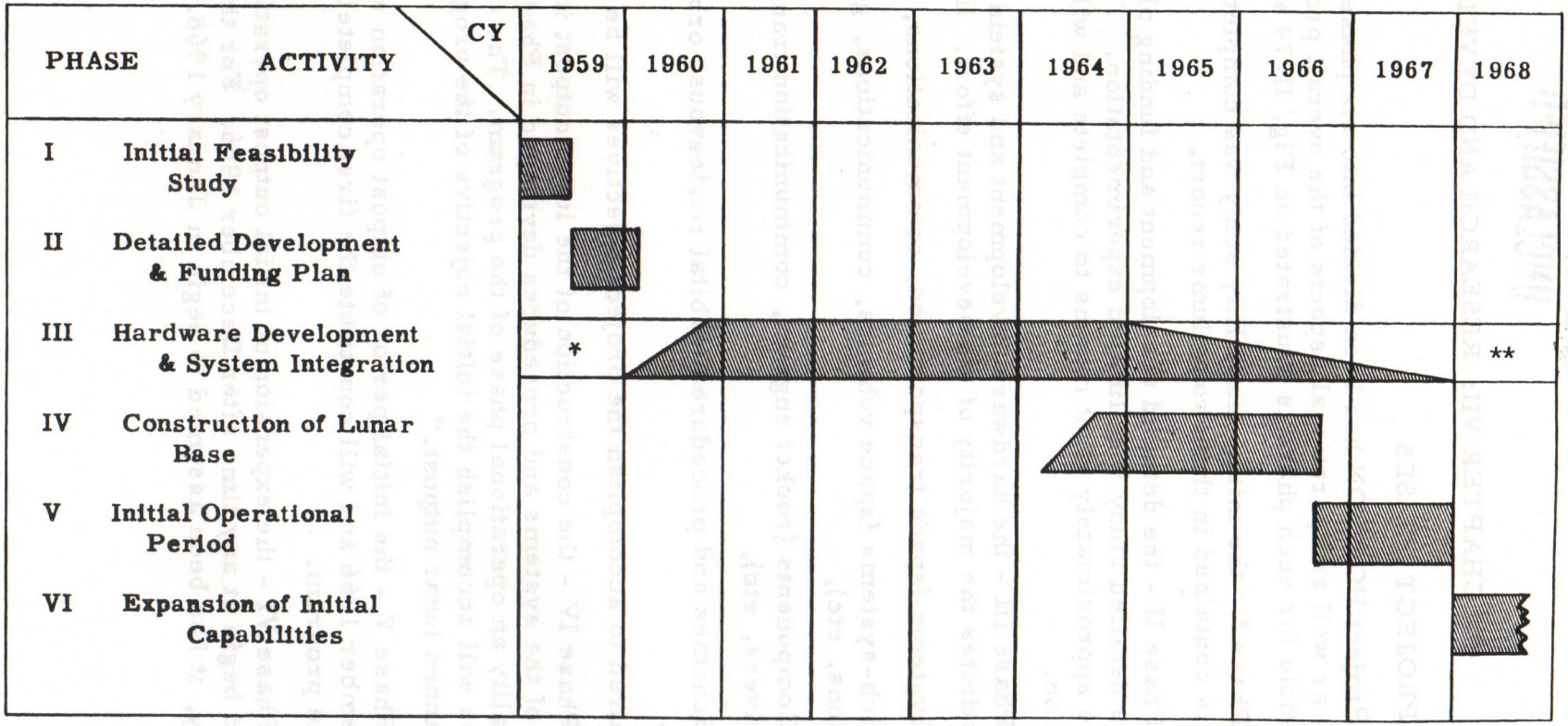


* Hardware and Systems being developed for other programs that will have direct application in Project HORIZON.

** Development required for expansion of capability.

Fig. II-79. Organization for R&D (Project HORIZON)

CONFIDENTIAL

CONFIDENTIAL
SECRET
UNCLASSIFIED

## B. BASIC AND SUPPORTING RESEARCH

### 1. Basic Research

No specific requirement is presented here for basic research, that is, research not directed toward a specific application in support of the establishment of a lunar outpost. Such a requirement would not be in keeping with generally accepted definitions and understandings of the role of basic research. However, it is required to emphasize the need for more support of basic research programs by the nation. The wellspring of fundamental knowledge, created over the past several centuries, is rapidly being depleted by expanding technological achievements of the missile and space age. More theoretical and experimental study in many disciplines is required to replenish and build up man's store of scientific knowledge.

### 2. Supporting Research

#### a. Background

As used herein supporting research encompasses "those experiments, studies, and investigations principally applied in nature, which are required for general support of future programs." Research in this category is not allied with a particular development program; although, application of knowledge gained to a particular future program is usually foreseen. The sole purpose of supporting research is to provide those advances in the state-of-the-art necessary to insure accomplishment of future programs on the desired time scale.

The importance of, and even the requirement for, supporting research has not yet been fully recognized. Lack of integrated supporting research programs adequately supported financially in the past has proven to be a major factor adversely affecting the time required to develop missile and space vehicle systems today. As space exploration and military missions in space become more comprehensive, supporting research requirements increase in anticipation of implementation of these more advanced programs. Under present conditions a problem recognized in advance, normally cannot be studied to the extent desirable prior to the assignment of an R&D program encompassing the particular problem or problem area. For example, the requirement for temperature control of the interior of an orbiting vehicle was recognized well in advance of the establishment of an earth satellite development program and, had funds been available, could have been readily accomplished prior to the initiation of a specific satellite design. Due to the lack of such a program, in the EXPLORER satellite series, for example, it was necessary to conduct a detailed study of the temperature control



CONFIDENTIAL
SECRET
UNCLASSIFIED

problem as well as to establish an acceptable design within a period of weeks. Fortunately, with limited testing, the temperature control system developed proved adequate. The considerable effort now being directed in the area of satellite and space vehicle temperature control has resulted mainly from the implementation of more comprehensive manned and unmanned space exploration programs. Admittedly, many problems are of such magnitude that only limited and experimentation are permissable prior to implementation of a development program. For example, in the area of heat protection for atmosphere re-entry bodies, development of a satisfactory ablative system for the JUPITER warhead cost approximately 20 million dollars. Yet, although re-entry heating conditions will be more severe for future missile system warheads and other re-entry bodies, even now neither is the mechanism of ablation fully understood nor is the potential of certain suitable ablative materials fully known.

Another broad spectrum of problems, which eventually becomes categorized as supporting research, first arises during a development program. In many instances, special case solutions are obtained for immediate application to the development program. It is recognized at the time that additional research is required, but must be deferred because of the urgency of the development program. As an example, serious lubrication problems developed recently in turbo-pump propellant feed systems operating under reduced ambient pressures. After limited study, satisfactory modifications to these particular propellant feed systems were made. However, encountering this unforeseen problem during a development program emphasized the need for more research in the area of lubrication under vacuum and near vacuum conditions of simple mechanisms as well as high speed devices.

The above examples are used only to illustrate and substantiate the role claimed for supporting research in the logical and orderly evolution of missile and space vehicle development programs. For maximum dividends, supporting research programs must be integrated in those areas of cognition of the various developing agencies.

It is assumed that a program as comprehensive and costly as the establishment of a lunar outpost will involve at least several months for decision lead time and program implementation. In the interim, until program implementation, more comprehensive feasibility studies are essential in all areas by those agencies concerned with the mission of establishing a lunar outpost. Delay in authorization and provision of funding support for these studies will be reflected directly in the time required for accomplishment. This requirement for continuing study further illustrates the role of supporting research as a

SECRET CONFIDENTIAL
UNCLASSIFIED

foundation for future programs. Many of the problems recognized in this preliminary study were recognized previously and studies conducted to a very limited extent. Had adequate supporting research funds been available in the past a considerable number of these problems would have been investigated in detail. At least many of these problems would have been better defined and best approaches to their solution determined prior to implementation of a R&D program. Lack of adequate and comprehensive supporting research programs leads to R&D programs being carried out on a "crash" basis. A reasonable approach to alleviate the current situation would be to provide approximately 10% additional funding support to Research and Development programs above direct program requirements. This would provide adequate supporting research to give R&D programs added growth potential, and allow for the long lead time initial study and experimentation required to prepare for future programs.

b. Research Requirements

It will be noted that many of the requirements discussed below are stated in rather general terms. At the same time, this preliminary study permitted presentation of some requirements in considerable detail.

(1) General

Continuing research, systems studies, and detailed feasibility studies are required in many areas for general support of space vehicle systems developments and space exploration. Included among the most important of these areas of long lead time study and research are the following: space vehicle transportation systems, orbital resupply station operations, midcourse and terminal guidance, rendezvous, trajectories, low density and high speed aerodynamics, physics, and aeroballistics of atmospheric entry, recovery techniques, heat rejection and temperature control, structures and materials research, propulsion and propellants, communications, tracking, data processing, surveillance, and auxiliary power.

In the following paragraphs some of these requirements are outlined in scope.

(2) Food and Oxygen

Determination of food characteristics for use in space and lunar environment; extension and acceleration of programs dealing with utilization of algae for food production (leading ultimately to selection of an algae strain optimizing nutritive value, and $CO_2$ to $O_2$ conversion); determination of methods to provide a safe and reliable



SECRET CONFIDENTIAL UNCLASSIFIED

nutrient supply for algae, including utilization of cellulose; research in hydroponics to determine effects of lunar environment on growth of higher forms of plant life.

(3) Clothing

Materials research and preliminary design studies for lunar environment clothing systems; studies of functional performance and space wounds.

(4) Biological, Chemical and Radiological

Investigations and study leading to design of lunar probe instrumentation to measure biological, chemical and radiological parameters in the vicinity of and on the lunar surface (particulate and electro-magnetic radiation fluxes, and chemical and biological parameters will greatly influence outpost construction and individual protective requirements); toxicity evaluation of propellants; decontamination of lunar probes; study of contamination preventive measures; investigation of methods for $0_2$ production and atmosphere regeneration utilizing lunar materials (once composition is known); and study of non-electronic signalling devices.

(5) Bio-medical Research

There are certain bio-medical related to man's flight into space that must be solved. A great number of these problem areas are recognized and their solution rests upon both basic and applied research. It is assumed that rapid advances and space vehicle development will soon provide the means for extended human transportation into space. However, it should be noted with clearest attention that man's survival and effective performance in accomplishing military duties in the medium of space itself, upon orbital stations, or other extraterrestrial bodies depends solely upon medical cognizance of the biologic hazards to be met and the combined skills of all engineering disciplines to protect against these hazards. For this reason, the opportunity to conduct bio-medical research in space must be provided immediately and continuously if man is to travel or be stationed in space.

(6) Maintenance of Life in a Vacuum

Outer space is without an atmosphere for all practical purposes. Man must take his earthly environment with him in order to survive. The development of a closed system simulating this environment is mandatory. This involves some critical problems in gaseous exchange, temperature and barometric pressure control, humidity, nutrition, and human waste disposal. Much progress in bio-engineering has been made, and with continued research and development, the

CONFIDENTIAL
UNCLASSIFIED

purely physical aspects will be solved. Significant progress in nutrition by the utilization of algae systems, mollusks, and insects has also been made.

(7) Weightlessness

Thus far, biological experiments conducted have indicated that little alteration in physiologic base lines has occurred to animals in a zero-gravity state. However, this experience is too limited to extrapolate to the human exposed to a prolonged gravity-free state. Data from manned orbital satellites will be necessary to obtain desired information in this area.

(8) Radiation

The radiation hazard on the moon or in space has not been fully defined. Probes, satellites, and possibly robot explorers, as well as experimentation with animal and other forms of life will be necessary to obtain the data required. This will be an extensive and involved study.

(9) Meteorites and Meteoroids

This hazard is yet to be understood. A large amount of statistical data will have to be compiled and evaluated.

(10) Influence of Lunar or Space Ecology Upon the Equilibrium of Terrestrial Microbiological Systems and Man

It is not known, and even speculation is scanty, just how the stablized symbiotic relationship of man and the microbiological population to which he is host will be affected by the strange environment of the moon and outer space. The mutability of life in all its forms is an inherent factor of life itself, and close observation will be essential in order to determine the subtlety of such changes and their influence, if any, upon the well being and survival of man.

(11) Lunar Surface Transportation

Initial effort will be directed toward identifying major research problem areas, establishing research requirements, clarifying design concepts, assimulating applicable scientific and engineering information, and initiating an integrated research program in lunar and planetary surface transportation. Presently foreseeable fields of major endeavor include refrigeration and thermal power cycles, structures and materials, air and oxygen storage and regeneration, sealing and lubrication, radiation, and heat rejection. Program broadening will precede by about one year the availability date of the large environmental research and training facility discussed later in this chapter.



CONFIDENTIAL
SECRET UNCLASSIFIED

Also at about this time, studies and experimentation with more unique means of surface locomotion begin. It is contemplated that study of these systems will establish requirements for stability, attitude control, power, and surface contact relationships, etc.

(12) Moon Mapping

A 1:1,000,000 scale map with 300-meter contour intervals should be prepared by analytic methods to determine contours. Preparation of special maps to support feasibility studies by others will be required. A special camera for use in the Skyhook Program will be developed. This mapping will contribute substantially to other space programs and is essential to the conduct of this program.

(13) Effects of Environmental Factors on the Performance of Selected Explosives and Initiator

There is a general lack of data on the performance of conventional explosives under the environmental conditions existing in space and on the lunar surface. This study will be limited to experimentation designed to establish the performance and handling characteristics of the test materials and to determine if major developments are required to meet the needs of this program and other space programs.

(14) Study of Power Generating Systems

The power generating systems proposed for this program are limited to nuclear reactors and fuel cells. To assure the availability of less expensive power generating systems, it is imperative that research be initiated on other systems including those employing solar energy. Advanced energy systems using techniques such as organic energy conversion, thermal energy storage, pyroelectric effect, pyromagnetic effects, etc., will be investigated. An important result of this program will be to provide the basis for power systems for future lunar and planetary stations which will be independent of earth logistical support. This continuing research program will establish what systems appear feasible for further development and application.

(15) Material and Lubricants

Essential to space exploration programs is continuing research in materials and lubricants. These programs should be sufficiently flexible to be guided by scientific environmental and engineering data obtained from time to time from space exploration programs. The Environmental Research and Training Facility discussed later in

CONFIDENTIAL UNCLASSIFIED

this chapter will be a valuable test medium supporting the materials and lubricants research programs.

(16) Soil Mechanics and Related Studies

In this study specific attention will be given to the behavior and properties of lunar and planetary surface materials. Much effort here depends upon the early success of lunar and planetary probes. This information is essential to the lunar landing vehicle and outpost construction, as well as to the development of surface transportation equipment.

(17) Liquid Hydrogen Production, Handling, and Storage in Space

Any significant space program probably will require launch site production of large quantities of hydrogen. In addition to this, the storability of cryogenics in space environment will have to be investigated in detail. There is need for a comprehensive research program designed to furnish detailed process information and establish firm design criteria necessary for the design and construction of high tonnage liquid hydrogen facilities, (including production, storage, and distribution equipment).

(18) System Studies, Man-Made Atmosphere

The system suggested herein for man-made atmosphere, is sound but requires rather sophisticated mechanical equipment. It is obvious that other systems require study including those that can more readily meet the requirements of the early phases of the outpost construction and operation of the orbital station.

(19) Electrical Properties and Environmental Effects

A study of the electrical properties of dielectrics and other materials in simulated space environments will be made. Also contaminating influences of one material on another and on other technical components will be tested. The effect on electrical properties will be investigated, either individually or in combinations of environment factors including vacuum, simulated solar X-rays, temperature, short wavelength, ultraviolet light, nuclear radiations, chemicals, and toxics. Initial research will be guided by data currently available on the environments of space, and the lunar and planetary surfaces. Data resulting from this study will be used to design improved electronic components and circuits for application in space exploration.



CONFIDENTIAL UNCLASSIFIED

Items (1) through (19) are to be considered just as research problems picked and listed at random to illustrate the need for research. This list is by no means complete.

c. Environmental Research and Training Facility

To support activities in space and on extra-terrestrial bodies, it is essential that a major technical facility for environmental research and training be constructed at the earliest practicable date. This facility would consist of three units located at two sites; one of which will probably be in the Rocky Mountain area. The facility will support this program and other space programs by providing essential capabilities which are not otherwise available to accomplish research, testing, and training. The three units will be mutually supporting and are described by the titles: (1) Research, Development, Test, and Training Center, (2) Flight and Gravity Simulator, and (3) Medical Research and Human Factors Center.

The first of these (the principal facility) will be located on approximately 1000 acres of land. The site selected should already have the needed logistical support capabilities and facilities. Construction of this facility must begin in FY 1960 if the schedules of this project are to be met. The facility would consist of the following:

1. Headquarters and Administration Building, (including an auditorium and computer center)
2. Physical and Biological Sciences Laboratory and Research Facilities
3. Training and Test Building
4. Radiation Laboratory
5. Main Simulator Facility with Mechanical Equipment
6. Power Plant (Critical), two (2) 20,000 KW units
7. Small Environmental Test Chambers (4)
8. Process Building
9. Work Shops with Equipment
10. Cafeteria (includes food preparation)
11. Local Transportation Facilities (no shop)
12. Fire and Rescue Station with Equipment
13. Helicopter Pad (all weather)

CONFIDENTIAL
UNCLASSIFIED

14. Air-conditioned Warehouse

15. Waste Treatment Plant

16. Security Fencing and Guard Facilities

17. Family Housing for Student-Trainees Selected for Duty in Space or on the Lunar Surface (200 men)

18. Access Roads and Bridges

19. Marginal Wharf - 500 feet x 60 feet with Approaches and Crane

20. Dredging for Channel and Turning Basin (200 feet x 20 feet Basin) Laboratory and Research Equipment

The above described facility will be available for use as follows: (assuming construction begins in January 1960)

For supporting research July 1961

For support of development (as for lunar outpost) January 1963

For Training of Personnel - January 1964

Figure II-80 and Figure II-81 illustrate the universal facility for lunar environment simulation.

The second site will contain the other two facilities; the Flight and Gravity Simulator, and the Medical Research and Human Factors Center. While the site has not yet been selected, it is probable that the site will be in Arizona, Colorado, Montana or Wyoming. The principal requirement is to obtain a site offering a vertical face of 3000 or more feet, with or without a tower extension. The requirements for the Flight and Gravity Simulator are shown in general form in Fig. II-82. This facility will not only simulate space flight accelerations but will permit studies of materials and men at reduced gravity, simulating conditions on the Earth's moon, on Mars and on Venus.

The Medical Research and Human Factors Center will make use of the Flight and Gravity Simulator also and will be located adjacent thereto. It will be a Physiology Research Center concerned with human reaction to space flight and reduced gravity and with the adaption changes in man at high altitude.

Figure II-82 illustrates this facility located somewhere in the Rocky Mountains.



CONFIDENTIAL UNCLASSIFIED



Fig. II-80. Lunar Environment Research, Development and Training Center (LERDT)

SECRET
CONFIDENTIAL
UNCLASSIFIED

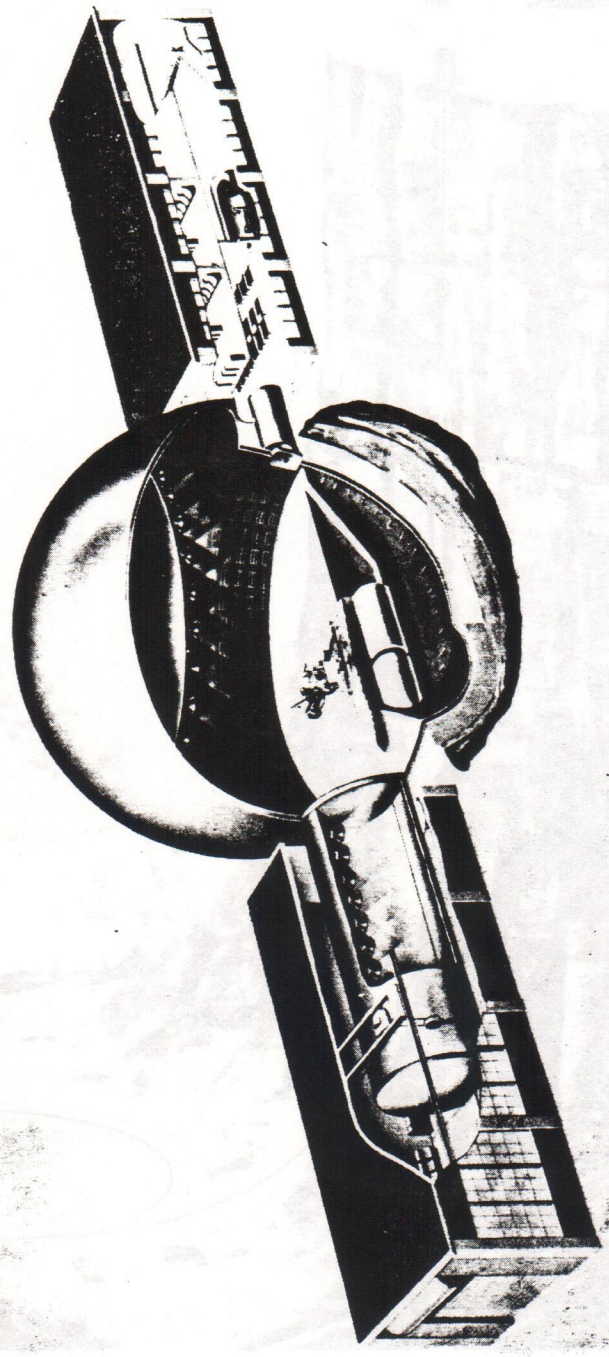

Fig. II-81. Cross Section Through Main Facility At LERDT



CONFIDENTIAL
SECRET
UNCLASSIFIED



Fig. II-82. View of Flight Simulator and Medical Research Center

SECRET CONFIDENTIAL UNCLASSIFIED

## C. PROGRAM REQUIREMENTS, R & D

As indicated in Table II-30, R&D Schedule and Estimate of Funding Requirements, the extent of many phases and programs of the overall R&D program dictates that many of these programs be implemented in the very near future. R&D programs will be integrated and placed with a developing agency having primary responsibility for the particular development item. The requirement for placing overall systems responsibility with a single developing agency is well established.

Major system, subsystem, and component requirements are discussed at length in the preceeding chapters. R&D requirements for these items are shown by fiscal year in Table II-30. Discussion of these requirements here would be unduly repetitious of material presented in preceeding chapters. However, three typical examples of the nature of requirements follow.

Food: A logical development program is planned beginning in FY 1960 with adaption of conventional foods for use in orbit and on the lunar surface, and development of procedures for hydroponic vegetable gardening at the outpost. Beginning in FY 1962, programs will be initiated to develop procedures for raising poultry and animals on waste materials and algae, and develop procedures for growing, harvesting and processing algae for oxygen and food production. Ultimate program objective will be to develop a closed cycle ecological system.

Clothing and General Supplies: The initial development program to provide the first lunar suit should begin immediately after completion of the detailed feasibility study. Approximately three years prior to occupation of the outpost, development and engineering of improved clothing systems should begin. Also, included in this program will be development of hand tools for use in the outpost shelter and the lunar environment.

Lunar Surface Transportation Vehicle: Design and development of the lunar surface vehicle will begin in FY 1962. Although systems development for motive power cooling and a space air-lock, and the materials requirements represent by far the major problems, the formulation of vehicle design concepts and configurations studies must likewise receive considerable attention early in the program. Major vehicle elements include suspension (including wheels and/or tracks), chassis, motive power cooling, air supply, space air-lock, communications and controls. Subsequent to completion and satisfactory lunar operation of the first generation vehicle, development will begin on a larger second generation 6-man vehicle with greater range and traversing capabilities.



SECRET CONFIDENTIAL UNCLASSIFIED

TABLE II-30

RESEARCH AND DEVELOPMENT SCHEDULE AND ESTIMATE OF FUNDING REQUIREMENTS

| Item | Fiscal Year | | | | | | | | | |
|---|---|---|---|---|---|---|---|---|---|---|
| | 1960 | 1961 | 1962 | 1963 | 1964 | 1965 | 1966 | 1967 | 1968 | Total |
| 1. Outpost Systems and Equipage | | | | | | | | | | |
| a. Food | | 4.2 | 4.1 | 4.3 | 3.1 | 1.1 | | | | 16.8 |
| b. Clothing and General Supplies (2nd Generation Suit Dev. begins FY 63) | | 1.5 | 4.0 | 4.0 | 2.0 | 3.0 | 4.0 | 4.0 | 5.0 | 26.5 |
| c. Lunar Surface Vehicle | | | 0.5 | 0.5 | 0.5 | 0.5 | 2.0 | 1.5 | 1.5 | 7.0 |
| d. Shelter and Components | 0.4 | 9.0 | 25.0 | 13.0 | 6.0 | 3.0 | | | | 56.4 |
| e. Installed Equipment | 0.5 | 10.0 | 25.0 | 15.0 | 8.0 | 3.5 | | | | 62.0 |
| f. Equip. & Processes, Atm | 0.5 | 7.0 | 20.0 | 10.0 | 4.0 | 1.5 | | | | 43.0 |
| g. Power & Distr System | | 30.0 | 37.0 | 49.0 | 31.0 | 5.0 | | | | 152.0 |
| h. Constr Equip., Tools and Supplies | 2.0 | 15.0 | 15.0 | 4.0 | 1.0 | 1.0 | | | | 38.0 |
| i. Technical Equip (Engr) and All Assembly Testing | | 3.0 | 6.0 | 4.0 | 5.0 | 3.0 | | | | 21.0 |
| 2. SATURN Vehicle System | | | | | | | | | | |
| a. Vehicle System (SATURN II) | 20.0 | 70.0 | 150.0 | 140.0 | 30.0 | 10.0 | 10.0 | | | 430.0 |
| b. Cargo Containers | 2.0 | 5.0 | 5.0 | 5.0 | 2.0 | 0.5 | 0.5 | | | 20.0 |
| c. Orbit-Lunar Return Vehicle | 5.0 | 15.0 | 40.0 | 60.0 | 20.0 | 5.0 | 3.0 | 2.0 | | 150.0 |
| d. Guid. and Control (Injection Midcourse and Terminal | 1.4 | 2.0 | 2.5 | 2.0 | 1.3 | 0.5 | | | | 9.7 |
| 3. Support Equipment | | | | | | | | | | |
| a. Earth Based | 0.8 | 0.9 | 0.9 | 0.8 | 0.4 | 0.2 | | | | 4.0 |
| b. Orbit Based | 0.1 | 0.4 | 0.4 | 0.1 | 0.1 | 0.1 | | | | 1.2 |
| c. Lunar Based | | 0.5 | 1.5 | 1.5 | 0.3 | 0.1 | 0.0 | | | 4.0 |
| 4. Communications, Tracking & Surv. | | | | | | | | | | |
| a. Earth Based | 6.3 | 11.7 | 8.6 | 4.8 | 3.6 | 1.0 | 0.6 | 0.3 | 0.3 | 37.2 |
| b. Lunar Based | 13.6 | 21.3 | 12.8 | 6.1 | 3.5 | 1.5 | 0.9 | 0.8 | 0.3 | 60.8 |
| 5. Supporting Research | | | | | | | | | | |
| a. General | 5.0 | 5.0 | 10.0 | 8.0 | 7.0 | 8.0 | 5.0 | 5.0 | 5.0 | 58.0 |
| b. More Detailed | | | | | | | | | | |
| (1) Food & Oxygen | 0.5 | 0.75 | 1.0 | 1.0 | 0.75 | 0.5 | 0.5 | 0.5 | 0.5 | 6.0 |
| (2) Clothing & General Supplies | 2.0 | 2.0 | 1.0 | 1.0 | 1.0 | 1.0 | 1.0 | 1.0 | 1.0 | 11.0 |
| (3) CBR | 5.0 | 6.0 | 4.0 | 2.0 | 2.0 | 2.0 | | | | 19.0 |
| (4) Bio-Medical | 3.0 | 5.0 | 5.0 | 5.0 | 5.0 | 5.0 | 5.0 | 5.0 | 5.0 | 43.0 |
| (5) Lunar Surface Transportation | 0.2 | 0.3 | 0.5 | 0.5 | 0.5 | 0.5 | 0.3 | 0.2 | | 3.0 |
| (6) Lunar Mapping | 0.4 | 0.5 | 0.1 | 0.5 | 0.5 | 0.1 | 0.1 | 0.1 | | 2.3 |
| (7) Explosives | 0.2 | 0.3 | 0.2 | 0.5 | 0.5 | 0.5 | 0.8 | 0.7 | | 1.0 |
| (8) Power Generation | 0.7 | 0.7 | 5.0 | 5.0 | 5.0 | 5.0 | 5.0 | 5.0 | | 31.4 |
| (9) Materials and Lubricants | 2.0 | 3.5 | 5.0 | 5.0 | 5.0 | 5.0 | 5.0 | 5.0 | | 35.5 |
| (10) Soil Mechanics | 0.2 | 0.3 | 0.3 | 0.3 | 0.5 | 0.5 | 1.0 | 1.0 | | 4.1 |
| (11) $LH_2$ Prod. and Handling | 2.5 | 2.5 | | | | | | | | 5.0 |
| (12) Man-made Atmospheres | 0.6 | 1.0 | 1.0 | 2.0 | 2.0 | 2.0 | 2.0 | 2.0 | | 12.6 |
| (13) Electr. Properties and Environmental Effects | 0.1 | 0.1 | 0.1 | 0.1 | 0.1 | 0.1 | 0.1 | 0.1 | 0.1 | 0.9 |
| *c. Facilities (Environmental Research and Training Center) | 56.1 | 48.0 | 9.3 | 8.0 | 5.2 | | | | | 126.6 |
| 6. Detailed Development and Funding Plan (Includes required limited experimentation and detailed feasibility studies) | 5.4 | | | | | | | | | 5.4 |
| TOTAL | 137.0 | 289.1 | 409.4 | 371.1 | 162.9 | 68.2 | 47.2 | 35.1 | 19.7 | 1539.7 |

*Required for, but not peculiar to this program (supports space programs in general)

SECRET
CONFIDENTIAL
UNCLASSIFIED

## D. R & D, SUPPORTING RESEARCH, PROJECT HORIZON

As mentioned briefly in the introduction of this volume, there will be numerous programs which will provide information pertinent to establishment of a lunar outpost. Some of these programs will provide general information relating to environment and techniques while others will have a direct bearing on the overall reliability of the vehicle transportation system.

Of particular interest are those programs which might employ the SATURN vehicle for one of the following type missions:

a. Orbital Return Flights

b. Lunar Circumnavigation

c. Lunar Satellite

d. Lunar Soft Landing

It is expected that implementation of a typical program of this type will occur as a natural integration of the National Space Program rather than as a requirement of a specific program such as is herein described.

Figure II-51 lists a total of six orbital return flights beginning in June 1961. Five of these flights are performed with the first generation SATURN booster and the sixth flight with the second generation SATURN. While the minimum orbiting capability of these vehicles is 30,000 and 70,000 pounds of net payload respectively, the recovery package would be limited to that capable of returning the 10-16 man capsule required for orbital operations. Part of the remaining payload would be available for much or perhaps all of the orbital research described previously.

Further recovery work will be conducted with the seven SATURN I lunar circumnavigation vehicles. Among other functions, these vehicles will be used to provide design data and establish the reliability of return from the vicinity of the moon. The guidance and control schemes used in these vehicles will be the same as those on which the lunar outpost vehicle systems will be based. This lunar circumnavigation phase of the space program will provide a manned capability for the first time.

Additional lunar guidance reliability will be established by the four SATURN I and the two SATURN II lunar satellite vehicles. The large payloads of these vehicles available for research should provide valuable information on lunar surface features and mapping. Approximately 3,000 pounds can be carried by the SATURN I and about 9,500 pounds of net payload by SATURN II.



CONFIDENTIAL
SECRET
UNCLASSIFIED

The fourth series of missions shown in Fig. II-51 are the lunar soft landings. The SATURN I will have the capability of placing approximately 1,750 pounds of net payload on the lunar surface while the SATURN II can soft-land approximately 6,000 pounds net payload. It would be with this series of flights that the guidance and landing techniques would be developed which will be used for later manned flights.

Because of the sizeable payload capability, an earth return vehicle, carrying samples of the lunar surface material, would be entirely feasible.

The pre-Project HORIZON program described above will provide the experience, reliability and techniques required to assure successful establishment of a lunar outpost.

## E. SUPPORTING ROLE OF OTHER U. S. PROGRAMS

Project HORIZON will make full use of data obtained and hardware developed in other U. S. space programs planned during this time frame. As examples:

1. NASA sponsored bio-medical experiments have been successfully carried out. Valuable data has been obtained and more is forthcoming.

2. Preliminary exploration of space, including the moon is already underway. Data obtained from all NASA and ARPA space explorations are directly applicable inputs influencing design parameters for the lunar outpost program.

3. Likewise, the Man in Space program (MERCURY) will furnish valuable data concerning man's reactions under certain conditions, as well as valuable vehicle hardware data.

4. The AEC will provide nuclear power supplies which are essential to the success of the program.

5. High performance engine development programs will increase the payload capabilities of the lunar space vehicles (SATURN II).

6. The Discoverer and WS 117L programs are expected to provide valuable data concerning the near earth environment and recovery techniques.

7. The ARPA, 24-hour communications satellite, as well as earlier programs in satellite communications, will provide experience and background in space communications, guidance techniques as well as SATURN booster development.

SECRET UNCLASSIFIED
CONFIDENTIAL

8. The IGY satellites have provided early environmental data for preliminary design; and more detailed data will evolve from current and near future programs.



CONFIDENTIAL UNCLASSIFIED
SECRET

SECRET CONFIDENTIAL UNCLASSIFIED

# (S) CHAPTER VIII: PROGRAM COST AND SCHEDULE

The intention of this chapter is to present a cost breakdown by fiscal year for the various phases of the overall program. The costs given represent the best possible preliminary estimates for the program. They were compiled by government agencies, each experienced in its respective field. The breakdown as shown is not all-inclusive, and only the major cost items are outlined.

The costs shown are those required for the build-up phase and the first operational year of the program. Since the program is assumed to continue, additional funds over and above those shown would be required during FY 1967 and FY 1968 to provide for the continuation of the outpost past 1968.

## A. OUTPOST COST

The cost of the outpost materiel and equipment required is estimated at $132 million. This amount, however, does not include the research and development funds which precede the procurement of the hardware which is actually transported to the lunar surface. R&D funding requirements for the lunar outpost are described in Chapter VII.

The cost of the outpost shown here does not include the cost of transporting the materiel to the lunar surface. These costs are covered in paragraphs C (Vehicle Cost) and D (Payload Container Cost) of this chapter.

As was pointed out earlier in this volume, this cost estimate is based on a 12-man outpost. Expansion of this facility by either additional personnel, facilities, or capabilities would add to this estimate by increasing the initial procurement of outpost materiel as well as increasing the vehicle, payload container, and launching site costs that are discussed in the later paragraphs of this chapter.

## B. ORBITAL STATION

For this program, it will be necessary to establish a minimum space station for the orbital fueling operation if a permanent space station will not be available when required. The payloads available from the orbital missions scheduled are sufficient for this requirement. In the event the orbital station is not completed in time for the early fueling requirements, the fueling crews can live and operate from the orbital transport vehicles.



SECRET CONFIDENTIAL UNCLASSIFIED

The orbital station will be constructed from empty cargo and fuel containers that have been delivered into orbit and the additonal payload available with the orbital transport vehicles. The crews will operate from the transport vehicles during the station construction phase. The completed station will include all the life support essentials, e. g., food, oxygen, space suits, etc., and equipment for station-to-launching site and station-to-transport vehicle communications. There will also be provided small space maneuvering vehicles for movement outside the space station, for positioning the fuel containers and lunar vehicles, for the fuel transfer operation, and movement between the transport vehicle and the station.

In addition to the orbital station, there will be two sets of orbital support equipment required for the fuel transfer operation and the check-out of the lunar vehicle.

The funding for these requirements is shown in Table II-31.

Table II- 31
ORBITAL STATION COST

| | Fiscal Year | | | | | |
|---|---|---|---|---|---|---|
| | 1960 | 1961 | 1962 | 1963 | 1964 | Total |
| Orbital Station | | | 7.5 | 7.5 | | 15.0 |
| Support Equipment | | | 0.8 | 0.8 | | 1.6 |
| Total | | | 8.3 | 8.3 | | 16.6 |

## C. VEHICLES

The funds required to meet space carrier vehicle requirements are depicted in Table II-32. The overall vehicle has been listed by stages. These requirements are based on the production schedule shown in Chapter VI (Table II-28) and do not include the R&D requirements which are shown in Chapter VII.

Line items have been included for the recovery and rejuvenation of the booster stages for both SATURN I and SATURN II. These funds would be used for the physical recovery, inspection, disassembly, repair, reassembly and checkout, etc., of the booster as well as for the required spare parts.

SECRET CONFIDENTIAL UNCLASSIFIED

It was assumed that no booster would be launched more than five times and that from three to six months will be required for the rejuvenation cycle. Six months was used for the initial mission and this period gradually reduced to three months as the program progressed.

A line item is also shown for the vehicle guidance, control, and instrumentation equipment required. This does not include the guidance and control systems required on the payload capsules for orbital rendez-

Table II-32
VEHICLE COST*

| Item | Fiscal Year | | | | |
|---|---|---|---|---|---|
| | 1964 | 1965 | 1966 | 1967 | Total |
| SATURN I Booster | 121.5 | | | | 121.5 |
| Recovery and Rejuvenation | 66.0 | 36.0 | | | 102.0 |
| SATURN I Second Stage | 30.0 | 37.0 | 2.0 | | 69.0 |
| SATURN I Third Stage | 21.3 | 26.3 | 1.4 | | 49.0 |
| SATURN II Booster | 87.0 | 174.0 | 137.8 | | 398.8 |
| Recovery and Rejuvenation | 2.0 | 42.0 | 86.0 | 80.0 | 210.0 |
| SATURN II Second Stage | 32.0 | 156.0 | 276.0 | 176.0 | 640.0 |
| SATURN II Third Stage | 20.0 | 97.5 | 172.5 | 110.0 | 400.0 |
| SATURN II Fourth Stage | 3.0 | 30.0 | 36.0 | 14.0 | 83.0 |
| Guidance, Control and Instrumentation | 19.0 | 38.0 | 35.5 | 22.0 | 114.5 |
| TOTAL | 401.8 | 636.8 | 747.2 | 402.0 | 2187.8 |

*Cost in millions of dollars.

vous, lunar soft landing, etc., as it is included under the line item for the respective vehicle concerned.

The average cost of a SATURN I vehicle for this program is approxi-



SECRET CONFIDENTIAL UNCLASSIFIED

mately $5.5 million. This is for vehicle hardware and does not include payloads, transportation, or launching costs. It does, however, include booster recovery costs.

Under the same assumptions, the average SATURN II cost is about $10.7 million. The higher cost per vehicle is due primarily to the larger stages and larger engines and the addition of a fourth stage.

In spite of the considerably higher vehicle cost, the SATURN II is an economical improvement over the SATURN I since it can deliver 2 1/2 times the payload to orbit, and more than three times the payload to the lunar surface.

Additional vehicles must be procured to support the operational phase past calendar year 1967.

## D. PAYLOAD CONTAINERS

Table II-33 illustrates the funding requirements for the payload containers for this program. Six basic containers are needed, three of which are recoverable. Line items are shown for each container type and for the recovery and rejuvenation where applicable. These costs represent production costs and do not include the R&D requirements shown in Chapter VII.

To avoid duplication of cost data, the cost of the actual payload is not included. Costs given in Table II-33 are for the containers only.

The cost of the SATURN I and SATURN II orbital cargo containers is $0.9 million and $1.05 million, respectively. These containers consist of fuel tanks or cargo compartments, depending on the mission. The cost of the guidance and control equipment and propulsion system required for rendezvous is also included.

The SATURN I and SATURN II orbital manned vehicle costs are $4.5 million and $4.75 million, respectively. The manned capsule portion of those two vehicles is identical and includes all personnel equipment, e.g., seats, oxygen supply, food, etc., guidance and control equipment, propulsion systems for the orbital and return maneuvers, and recovery equipment. The SATURN II vehicle costs were due to the additional cargo compartment available.

The SATURN II direct cargo vehicle costs $2.5 million and includes

SECRET
CONFIDENTIAL
UNCLASSIFIED

mid-course and terminal guidance and control, and a braking system for the soft landing operation.

The SATURN II orbit to lunar cargo vehicle costs $4.5 million each and includes the propulsion stages and guidance and control equipment for the orbit to lunar and soft landing maneuvers.

The SATURN II orbit-lunar-return vehicle costs $8.0 million and consists of propulsion systems for the orbit to moon, soft landing, and return to earth maneuvers. The cost also includes guidance and control equipment for each phase of operation, recovery equipment, and personnel equipment. The recovery and rejuvenation cost include the recovery operation itself and the necessary repair to the manned capsule. The new propulsion stage item is the cost of replacing the unrecovered soft landing, and return propulsion systems with associated guidance and control equipment. This cost is $5.0 million per vehicle.

## E. LAUNCH SITE AND OPERATION

Table II-34 sets forth the funds required to construct and operate the equatorial launching site needed for this program. These costs are typical, and, since they are preliminary in nature, would apply to either the Christmas Island or Brazil Site. Estimates are given by the following categories: site construction, site operation, ground support equipment, payload packaging, and the transportation for shipping, not only site construction material, but also support supplies and vehicle and payload components.

Table II-35 shows a typical funding schedule for the launching site construction. Engineering studies must be started the last half of 1959 if the required facility is to be ready in time to meet the firing schedule. Actual construction of the service and logistical facilities such as roads, airfields, docks, and the temporary camp should be started by the end of CY 1959. The launching pads and blockhouses would not be started until mid 1960. The first firing from this site would be in January 1963 at which time two pads and one blockhouse will be completed. Based on this typical schedule, the entire complex that has been outlined would not be completed until the end of CY 1965; however, sufficient facilities would be completed in time to meet the program firing schedule.

## F. COMMUNICATIONS AND ELECTRONICS SYSTEM

The cost breakdown in Table II-36 depicts the funds required for the



SECRET
CONFIDENTIAL
UNCLASSIFIED